(16)

Appendix to Motion of Petitioners for a Writ of Certiorari to Correct a Diminution of the Record

Supplemental Transcript of Record

Supreme Court of the United States

OCTOBER TERM, 1927

No. 262

FAIRBANKS, MORSE & COMPANY AND SHEFFIELD CAR COMPANY, PETITIONERS,

vs.

AMERICAN VALVE & METER CO. AND EDWARD E. JOHNSON

ON WRIT OF CERTIORARI TO THE UNITED STATES CIRCUIT COURT OF APPEALS FOR THE SEVENTH CIRCUIT

FILED DECEMBER 2, 1927

(32,710)

(32,710)

SUPREME COURT OF THE UNITED STATES

OCTOBER TERM, 1927

No. 262

FAIRBANKS, MORSE & COMPANY AND SHEFFIELD CAR COMPANY, PETITIONERS,

vs.

AMERICAN VALVE & METER CO. AND EDWARD E. JOHNSON

ON WRIT OF CERTIORARI TO THE UNITED STATES CIRCUIT COURT OF APPEALS FOR THE SEVENTH CIRCUIT

INDEX

	Original	Print
Supplemental record from the United States circuit court of appeals, seventh circuit	1	1
Plaintiffs' Exhibits "C" and "D"—Photographs	1	1
Defendants' Exhibit No. 2—File-wrapper and contents of Johnson patent	3	3
Defendants' Exhibit No. 3—File-wrapper and contents of Foster patent	44	47
Defendants' Exhibit No. 4—File-wrapper and contents of Fenner patent	52	56
Defendants' Exhibit No. 5—File-wrapper and contents of Foster interference	61	64
Defendants' Exhibit No. 23—Sketch of plaintiffs' Hayfield standpipe, showing dimensions	66	69
Defendants' Exhibit No. 24—Poage 1900 catalog, pages 51, 52, 53, 54	67	70

JUDD & DETWEILER (INC.), PRINTERS, WASHINGTON, D. C., DECEMBER 14, 1927

	Original	Print
Defendants' Exhibit No. 25—Poage 1902 catalog, page 2.	71	74
Defendants' Exhibit No. 26—American Valve & Meter Co. 1906 catalog, pages 22 and 23	72	75
United States letters patent No. 220,580	75	77
259,457	78	80
420,889	81	82
444,143	86	87
550,737	91	91
596,590	95	96
648,346	105	106
633,559	109	109
798,406	121	121
818,968	124	124
158,049	137	137
209,861	139	139
782,496	143	143
Exhibit—U. S. Blue Print No. 1	145	147
Clerk's certificate (omitted in printing)	146	

PLAINTIFFS' EXHIBIT C, PHOTO SHEFFIELD NO. 10
STANDPIPE.

PLAINTIFFS' EXHIBIT D, PHOTO SHEFFIELD NO. 11 92
STANDPIPE.

[fol. 3] DEFENDANTS' EXHIBIT No. 2

File Wrapper and Contents of Johnson Patent

Application Serial No. 195,823 to Edward E. Johnson, Railway Water Columns. Application executed January 27, 1904. New oath executed August 14, 1905. Filed complete February 29, 1904. Serial No. 195,923. Attorney, Henry W. Carter, Chicago, Illinois. Associate Attorney, Davis & Davis, Washington, D. C.

Contents

Print, August 1, 1904.
1. Rej. Mar. 30, 1904.
2. Letter May 31, 1904.
3. Amendment "A," June 7, 1904.
4. Interference Letter Aug. 9, 1904.
5. Associate power of att'y Sept. 19, 1904.
6. Claim suggested Dec. 13, 1904.
7. Amendment "B" Dec. 27, 1904.
8. Rej. Jan. 21, 1905.
9. Amendment "C" May 29, 1905.
10. Rej. June 23, 1905.
11. Amendment "D" July 29, 1905.
12. New Oath Aug. 17, 1905.
13. Rej. Oct. 6, 1905.
14. Amendment Oct. 7, 1905.

Title:

Improvement in Railway Water Columns Class 137—Water Distribution Tanks.

Specification

To all whom it may concern:

Be it known that I, Edward E. Johnson, a citizen of the United States, residing at St. Paul, in the County of Ramsey, and State of Minnesota, have invented certain new and useful improvements in Railway Water Columns, of which the following is a specification:

This invention relates to improvements in railway water columns or devices of that class which are more particularly intended for supplying water to locomotive tenders, and which comprise a standpipe located alongside of a rail- [fol. 4] way track, or between two such tracks, and a laterally extended spout on the standpipe to be turned either at right angles to the tracks to supply water to locomotive tenders, or parallel to the track to avoid the passing trains when not in use, and also adapted to be swung vertically throughout a considerable range of movement for the purpose of bringing the mouth of the spout into immediate proximity to the tank openings of tenders of various heights, and of avoiding the coal which is piled on the tenders above the water tank.

Insert C, 4, 29, '05.>

One of the defects of railway water columns of this kind as heretofore constructed, has been that the end of the spout in moving downwardly swings to one side of a vertical line of descent to such an extent as to carry it laterally beyond the tank opening or water hole of the tender, either at the upper or lower or at both limits of its movements, and a principal object of the present invention is to avoid this difficulty by mounting the spout in such manner that the arc of movement described by the end of the spout, even when the range of movement provided is unusually great—six feet or more—will so closely approach a direct vertical line as to keep the spout at all times in proximity to the tank opening whatever the height of the tender.

A further object of the invention is to provide water courses free from obstruction and abrupt changes of direction and a spout draining quickly away from the standpipe and not liable to be inoperative from freezing. And other objects are to provide an improved mounting for the water column tending to automatically return the column to its position of parallelism with the tracks when not in use. Also to provide an improved valve mechanism for controlling the flow of water through the column, and to provide various other features of improvement in the column itself.

To these ends the invention consists in the matters hereinafter described and more particularly pointed out in the

appended claims when considered in connection with the accompanying drawings, in which,

Figure 1 is a side elevation of a railway water column constructed in accordance with my invention, the foundation and pit for the base of the column being shown in section.

Figure 2 is a top plan view of the column illustrated in Fig. 1.

[fol. 5] Figure 3 is a vertical section of the working parts of the valve shown in Fig. 1, these parts being shown in the position they occupy when the valve is closed.

Figure 4 is a sectional view of the same valve, including its connections with the inlet pipe and water column, and showing the working parts in the position which they occupy when the valve is open.

Figure 5 is a top plan section taken on line 5—5 of Fig. 4.

Figure 6 is a top plan section taken on line 6—6 of Fig. 4.

Figures 7 and 8 are vertical sections of the valve mechanism, showing the parts in different working positions from those occupied in Figs. 3 and 4.

Figure 9 is a vertical section of a simplified form of the valve mechanism, designed to be entirely operated by hand.

Figure 10 is a vertical sectional detail taken through the standard which supports the water column.

Figure 11 is a top plan section thereof, taken on line 11—11 of Fig. 10.

Figure 12 is a top plan section thereof taken on line 12—12 of Fig. 10.

Figure 13 is a sectional detail taken on line 13—13 of Fig. 1, showing the valve operating connections at the lower end of the standpipe.

Figure 14 is a fragmentary detail of a portion of these connections.

Figure 15 is a top plan view of the laticed frame work showing the manner in which the operating lever is mounted therein.

Figure 16 is a sectional detail taken on line 16—16 of Fig. 15.

As shown in said drawings the water column C comprises a vertical standpipe 1, to the lower end of which water is admitted through a suitable valve 2 and from the upper end

of which water can be discharged through a spout 3. The lower end of the standpipe and its valve 2 are shown as enclosed within a pit P from which the standpipe emerges through a tubular standard 4 within which the standpipe 1 is free to swivel upon a vertical axis. For security and permanence of construction the standard 4 is herein shown as cast with a flange 5 which rests upon I-beams 6 that extend across the pit and are buried at their ends in its masonry walls, the standard and column being thus supported independently of the plank top p of the pit, and not affected by any shrinking or warping of the plank. A frost floor p^1 is [fol. 6] shown as extending across the pit some distance below its top p, but above the valve 2, to prevent the latter from freezing up.

As hereinbefore stated, a principal feature of the present construction consists in the peculiar manner of maintaining the spout 3 on the standpipe 1 in such way as to permit of the vertical swinging of the spout throughout the desirable arc of movement with but little lateral deflection

spout

5, 29, '05. of its outlet. To this end the [latter]* ∧ is shown as carried by a latticed frame work 7 to oppositely projecting lugs 8^a

Insert C', 10, 7, '05 which is pivoted at its inner end ∧ to the standpipe at a point 8 near the top of the

The framework

5, 29, '05. latter and ∧ ∧ [which]* carries at its outer end an annular collar or band 9 that encircles the spout and rigidly supports it in the frame work. The spout itself is an entirely separate piece from the standpipe, and except for the frame work 7, and for a brace 7^a between the inner end of the spout and the inner end of the frame work, has no permanent connection therewith, the upper end of the spout simply serving to loosely enclose a laterally extending nozzle 9 in which the upper end of the standpipe terminates. This nozzle is herein shown as made in the form of a goose-neck 10, the curved middle portion of which extends a considerable distance back of the column on the opposite side from the spout 3 and tends to balance the weight of the spout and to thus relieve

[*Words and figures enclosed in brackets erased in original transcript.]

the standpipe from sidewise strains, while permitting a sufficient

5, 29, '05. ∧ [the necessary]* movement of the spout

Insert C'. over the mouth of the goose-neck ∧ .

5, 29, '05.

Suitable means, such as coiled springs enclosed within protecting tubes 11, are shown as stretched [fol. 7] between the frame 7 and the back of the goose-neck 10 to normally maintain the spout in its raised position, these springs being at the same time so applied that leverage of the spout against them will increase as the spout is depressed so that when the spout is in its lowermost position its weight will overcome the tension of the springs and prevent their lifting the spout again except by the assistance of the operator.

The latticed framework, being stiffened against a horizontal pull and so attached to the standpipe as to swing horizontally with it, serves the novel purpose of a lever to rotate the water column as well as to support the swinging spout. An upwardly projecting pin 12 is provided on the extreme end of the frame 7 above the spout to serve as a handle by which the spout can be conveniently swung around horizontally with the standpipe, which for this purpose is made to swivel within the standard 4, as before stated.

The flow of water through the standpipe is controlled by an operating lever 213 which extends along the inner under side of the frame work 7 to within convenient reach of the operator as he stands upon the tender. This lever is pivoted to the frame 7 at 14, and at its inner extremities is pivotally connected with the upper ends of

Insert C², vertical rods 15 ∧ [which extend]* down each

5, 29, '05. side of the standpipe to a point on the latter below the frost floor of the pit. Here the lower ends of the rods are secured to a ring 16 which loosely encircles the standpipe and passes between lugs 17 on a forked lever 18, which latter is secured at its forked end to the valve casing by links 19 and is connected at its other end 20 to the upper end of the stem of the valve 2. The rods 15 are prevented from twisting on the standpipe

[*Words and figures enclosed in brackets erased in original transcript.]

by sliding loosely through guide holes in a ring 21 that is clamped about the pipe just below the ring 16 (Fig. 1).

With this construction the swinging up and down of the spout 3 may obviously take place without affecting the valve, while the valve operating lever may itself be moved upon the frame, in any position of the spout, to admit water to the standpipe or shut it off therefrom, as desired. The outer end of the lever 13 is shown as projecting through and guided by a loop 13^a which is located on the [fol. 8] frame 7 at one side of the spout and is provided with a stop lug 22 beneath which the end of the lever may be thrust to hold the valve open while the column is delivering water.

The weight of the standpipe and spout is herein shown as supported upon an inner annular shoulder 25 of the standard 4, by a number of antifriction rollers 26 that are inserted between the shoulder 25 and an opposing flange or annular ring 27, which latter encircles the standpipe and is rigidly clamped thereto by set screws 28 (Fig. 10). The rollers

10, 7, '05. 26 are shown as ∧ mounted (loosely) within a cage 29 ∧ [9]* that is recessed at 29^a to receive them, and is also recessed at 30 to receive horizontal rolls or disks 30^a that are inserted between the

" " ring 27 and a flaring or bell like mouth (33) ∧ [31]* to the standard 4. This double form of bearing serves to support the standpipe with but little friction, notwithstanding the fact that the spout projects laterally to a considerable distance from the pipe and is not wholly counterbalanced by the goose-neck at the upper end of the spout. The bearing when complete is enclosed by a flaring cap 32 (Fig. 10), which is lowered over the ring 29 and is large enough to embrace the upper end 33 of the standard, thus largely protecting the bearing from dirt and moisture.

For the purpose of causing a more or less automatic action of the standpipe tending to swing the spout back into a position parallel with the tracks after the filling of the locomotive tank has been completed, a cam device is pro-

[*Words and figures enclosed in brackets erased in original transcript.]

vided, as more particularly shown in Figs 1
5, 29, '05. [1]* and 12. This device includes a station-
ary oval cam 35 on the lower end of the stand-
within the pit and above the frost floor p'
" " ard 4, ∧ and a cam roller 36 adapted to travel
on the outer periphery of said cam. The
roller 36 is herein shown as mounted between
the ends of a lever 37, of which one end is
pivoted at 38 to a yoke 39 that is clamped
[fol. 9] rigidly around the standpipe. A
heavy spring 40 is stretched between the other
opposite
" " end 41 of the lever 37 and the ∧ [opposed]*
end 42 of the yoke 39, and its action serves to
force the roller 36 against the periphery of
35
10, 7, '05. the cam ∧ [33]* with considerable force. This
tends to cause the roller 36 to ride down the cam towards least diameter of the latter, and reacts through the lever 37 and yoke 39 to swing the standpipe around parallel to the tracks.

At its points of greatest diameter the cam 35 is provided with concentric portions, so that the standpipe will have no tendency to rotate while supplying water to the engine, even though the latter may come to a stop when its water hole is not exactly opposite the standpipe. At its points of least diameter, on the other hand, the cam is provided with recesses 43 which serve to receive the roller 36 and tend to hold the standpipe against movement when its spout is swung around between the tracks and parallel to the latter. In the position of the parts shown in Fig. 12, the spout may be regarded as occupying a position of about forty-five degrees from its two extreme positions, the roller 36 being ready at this movement to travel down into the adjacent hollow 43, as the spout swings back parallel with the tracks, or to climb the cam in the opposite direction, as the spout assumes a position at right angles to the track, as shown in Fig. 1.

The valve which I have designed for my improved water column is a quick opening and slow closing valve, so con-

[*Words and figures enclosed in brackets erased in original transcript.]

trolled as to prevent any undue shock or water hammer. And it is furthermore so constructed as to permit the water remaining in the column, after the valve is closed, to leak away and prevent freezing in the standpipe.

Such a valve may be operated either by hand or by the hydraulic pressure of the water in the main. In its simpler hand-operated form, such as is shown in Fig. 9, it comprises a cylindrical main valve 50, the lower annular edge 51 of [fol. 10] which is adapted for contact with an annular valve seat 52. This valve seat is formed at the outer upper end of a U-shaped discharge pipe or section 53 of the valve, the other end of which is formed with a stuffing box 54 that receives the lower end of the standpipe 1.

Surrounding the valve seat 52 and enclosing the lower end of the main valve is an inlet chamber 55 having lateral extensions 56 which are continued along and around the U-shaped pipe 53 to a flanged inlet end 57 where connection is made with the main that supplies water to the valve and standpipe. Enclosing the upper part of the main valve 50 is a housing 58 having at the center of its top a stuffing box 59, through which the operating stem 60 of the valve is extended to connect with the lever 18. The main valve 50 passes from this housing down into the chamber 55 through a close fitting opening which will ordinarily be made water tight by a hydraulic packing 61. Furthermore the housing is provided at about midway of its height with an inwardly projecting annular flange 62 which fits closely around the main valve and forms an approximately water tight connection therewith, although the absolute prevention of leakage at this point is unnecessary and no special packing need be provided. This flange 62 divides the interior of the housing into an upper or cushioning chamber 63 and a lower leakage chamber 64. Of these the former or cushioning chamber 63 is connected with the discharge pipe 53 leading to the standpipe by a by-pass 65, the flow through which is controlled by a valve 66. The lower or leakage chamber 64, on the other hand, is provided with an outlet pipe 67 which may be conveniently controlled by a petcock 68.

In operation, the stem 60 of the valve is drawn up when the hand lever 13 is actuated to lift the rods 15 and lever 18. This drawing up of the stem 60 raises the main valve from its seat, and admits water from the inlet channels 55 and

56 to the U-shaped discharge pipe 53, and thence through the standpipe and spout to the tank of the engine. To permit this opening movement to be very rapid, the water in [fol. 11] the upper or cushioning chamber of the housing 58, is allowed to escape freely, while the main valve 50 is moving up—principally through an outlet opening *o*, provided in the top of the main valve 50 and normally closed by a spring pressed valve plate ∧ (conveniently an ordinary rub-er pump valve).

The closing of the valve is accomplished by swinging the main lever 13 back to its normal position on the latticed frame work 7, and by thus depressing the rods 15 and lever 18, and forcing down the valve stem 60. During this movement the pump valve O is closed and largely prevents the entrance of water to the cushioning space above the piston through the opening *o*, and there is a consequent tendency for a vacuum to form in this cushioning chamber, and for the descent of the valve to be thereby retarded. This retardation, however, is modified, as herein shown, by the by-pass 65 and by a series of apertures 69 provided in the cylindrical wall of the main valve 50, and through which a limited flow of water may take place during the beginning and greater portion of the valve movement. These apertures are arranged in a row somewhat inclined from the horizontal, and are also shown, in this instance, as made of increasing diameter from the uppermost to the lowermost hole of the series. When the valve is in its uppermost position the entire series of apertures 69 are located above the flange 62, so that, in the initial movement of the valve, water can enter the cushioning chamber through all of them. As the valve moves down, however, the holes 69 are closed off one by one by the flange 62, and as a result there is an increasing tendency for a vacuum to form above the valve and within the cushioning chamber, with a corresponding increase in retardation until all of the holes 69 are closed off and the by-pass 65 affords the only channel for admitting water behind the main valve. The final closing movement of the valve is then completely controlled by the flow of water through the by-pass, and this may be regu- [fol. 12] lated by adjusting the valve 66. Said by-pass and valve, therefore, afford an exterior and readily accessible

means of adjusting the valve movement as desired, or as may
5, 29, '05. ∧ [my]* be necessary to prevent undue shock or water hammer.

After the valve has thus closed, the water remaining within the standpipe gradually leaks away through the outlet pipe 67 and petcock 68, which latter always will be left at least partially open, this leakage continuing through the apertures 69 and leakage chamber 64, until the level of the water within the standpipe is lowered to the level of the outlet 67, which is a sufficient distance below the frost floor to obviate all danger of the standpipe's freezing up during its periods of operation.

In the more highly developed form of value shown in detail in Figs. 3-8, the hydraulic pressure of the water from the main is relied upon to operate the valve, but the movement of the valve is controlled in much the same manner as before.

This construction also employs a cylindric main valve 75, the annular lower edge of which is adapted for contact with an annular valve seat 52, formed and located as before described in connection with the hand operated valve. This main valve 75 is connected by a tubular valve rod 76 with an actuating piston 77 which is mounted to reciprocate vertically within a pressure cylinder 78, conveniently located in the upper part of the valve housing. At its upper end the tubular piston rod 76 passes out of the top of the housing through a stuffing box or hydraulic packing 79, and is itself provided with a stuffing box or hydraulic packing 80 through which the operating valve 60 is free to reciprocate. A piston valve 81 fits within the tubular piston rod 76 and is secured therein to the valve stem 60, which latter is also made tubular and closed at its upper end, its lower end being left open and projecting down through a [fol. 13] hydraulic packing 82 into the discharge section 53 of the valve.

The valve 81 is essentially a D-valve, i. e., it is provided with upper and lower bearing surfaces or rings 83 and 84, between which is an annular exhaust passage 85 that communicates with the interior of the valve stem 60 through

[*Words and figures enclosed in brackets erased in original transcript.]

a
5, 29, '05. one or more ports 85. Opening through the tubular piston rod 76 at points above and below the piston 77 are ports 86 and 87 placed so close together that only one set of said ports at a time can be uncovered by the valve piston 81. These ports admit water to the cylinder 78, either above or below the piston 77, as may be desired, and according to the position occupied by the valve stem 60. This water enters from the main through a radial channel 88 in the main valve 75, and passes thence up through the tubular piston rod 76, and (in order to reach the upper ports 86) through vertical channels 89 in the valve 81.

The position occupied by the parts when the main valve is closed and the apparatus is at rest, are indicated in Fig. 3. In Fig. 8 the valve stem 60 is shown as drawn up so as to admit water to the lower end of the cylinder 78 through the ports 87, the lifting movement of the main valve 75 being now just about to commence. In Fig. 4 the upward movement of the main valve has just been completed, the valve stem 60 and inner valve piston 81 being still raised. In Fig. 7 the valve stem 60 and piston 81 are shown as having been depressed with the intention of closing the main valve, the water being just about to enter the upper end of the chamber 78 to force down the piston 77, and close the valve.

The cushioning action of the valve, in this case, is much the same as in the case of the manually operated valve shown in Fig. 9. The interior of the housing 58, around the main valve 75, is divided by a similar inwardly projecting flange 62 into an upper cushioning chamber 63 and a lower leakage chamber 64, the former being connected [fol. 14] with the discharge pipe 56 of the valve casing by a by-pass 65, controlled by a valve 66. And the cylindric wall of the valve is provided with a similar inclined row of apertures 69, of varying sizes, which open into the cushioning chamber 63, above the valve 62, or into the position occupied by the valve. At their inner ends these apertures 69, in this instance, open into a segmental port 92, which is cored in the cylindric wall of the main valve 75 and leads down and out beneath the transverse wall 93 thereof, said apertures and port thus constituting channels of communication between the opposite sides of the main valve. A

large outlet through the main valve is also herein shown as provided in an opening o, located in the transverse wall 93 of the valve, and controlled by a spring pressed valve plate O (also conveniently an ordinary pump valve), which permits water to flow out of the cushioning chamber through the opening a, but prevents it from entering the chamber at this point.

With this construction, when the valve stem 60 and pis-

5, 29, '05 ton valve $\frac{81}{\wedge}$ [87]* are drawn up, water is admitted from the main to the lower end of the

" " cylinder 78 through the radial channel $\frac{88}{\wedge}$ [78,]* tubular piston rod 76 and ports 87 (Fig. 8). This forces up the piston 77 and causes the main valve to be lifted with the piston, by reason of their being rigidly connected by the tubular piston rod 76. During this opening movement of the main valve the water in the cushioning chamber 63 readily escapes, principally through the outlet opening o, and the valve consequently opens very quickly, and finally assumes the position shown in Fig. 4.

To reverse the operation the valve stem 60

" " and piston $\frac{81}{\wedge}$ [68]* are depressed and water is admitted to the upper end of the cylinder 78 through the radial channel 88, tubular piston rod 76, vertical channels 89 and ports 86, and the piston 77 is forced down, carrying with it the main valve 75. The initial clos- [fol. 15] ing movement takes place rapidly and freely, owing to the large area of communication with the cushioning chamber afforded by the several holes 69, by which water from beneath the valve 75 is permitted to rush into said chamber and relieve the tendency for a vacuum to form behind the valve. This area, however, gradually decreases as the holes 69 are cut off by the flange 62, until, just before the valve comes in contact with its seat, the only remaining channel through which water may enter the

[*Words and figures enclosed in brackets erased in original transcript.]

75

10, 7, '05. space behind the valve ∧ [66]* is the by-pass 65. So that by adjusting the capacity of this by-pass by means of the valve 66, the final closing movement of the main valve 75 may be controlled to occur as gently as possible, and in the same manner as in the case of the hand operated valve.

In both forms of this improved valve mechanism, a curved guide plate will desirably be provided to direct the water smoothly into the discharge pipe 53 when the valve is opened, and thus avoid eddies and cross currents which might otherwise interfere with the efficient working of the apparatus. In the manually operated valve shown in Fig. 9, this guide plate, designated G, is a stationary plate which nearly fills the lower end of the piston valve 50 and is supported therein at a considerable distance above the valve seat 52 by a standard g, the lower end of which is firmly secured, by a screw joint or otherwise, in the casting of the discharge pipe 53 beneath.

In the form of valve shown in Figs. 3-8, however, such a guide plate G' is permanently secured to the lower side of the valve 75 and moves with it. A central aperture is also provided in this plate G' for the hollow valve stem 60 to reciprocate freely through, and to thereby discharge the water exhausted from the cylinder 78 into the discharge pipe 53 in either the closing or opening movement of the main valve and its actuating piston.

[fol. 16] I claim as my invention:

1. A water column, comprising a standpipe terminating at its upper end in a nozzle, a spout swinging loosely over and drawing away from the stand pipe

5, 29, '05. the nozzle, ∧ , and a support for the spout pivoted to the stand pipe at a

Insert D, point ∧ below the uppermost

July 29, '05. level of the outlet of the spout, substantially as described.

2. A water column comprising a standpipe terminating at its upper end in a nozzle, a swinging spout fitting loosely over the nozzle and drawing away from the stand pipe

" " ∧ , a support for the spout pivoted to the

[*Words and figures enclosed in brackets erased in original transcript.]

Insert C³, 5, 29, '05. standpipe at a point ∧ forward of the inlet end of the spout in its uppermost position, substantially as described.

3. A water column comprising a standpipe terminating at its upper end in a nozzle, a swinging spout fitting loosely over the nozzle, a support for the spout pivoted to the stand-

Insert D, July 29, '05. pipe at a point ∧ below the level of the outlet and *and* forward of the inlet end of the spout when in its uppermost position, substantially as described.

4. A water column comprising a standpipe terminating at its upper end in a nozzle, a spout swinging loosely over the nozzle, and draining away from the standpipe, and a support for the spout pivoted to the standpipe at

Insert D, July 29, '05. a point ∧ below the outlet and forward of the inlet end of the spout in its uppermost position, substantially as described.

5. A water column, comprising a standpipe terminating at its upper end in a nozzle, a swinging spout fitting loosely over the nozzle, and a support for the spout pivoted to the

Insert C⁵, 5, 29, '05. standpipe ∧ and engaging the spout about midway of the length of the latter, substantially as described.

6. A water column, comprising a standpipe terminating at its upper end in a nozzle, a swinging spout fitting loosely over the noz-

and drawing away from the stand pipe

5, 29, '05. zle ∧ , and a support for the spout pivoted at its inner end to the standpipe at

Insert D, July 29, '05. a point ∧ below the uppermost level of the mouth of the spout and secured at its outer end to [fol. 17] the spout about midway of the length of the latter, substantially as described.

7. A water column comprising a standpipe terminating at its upper end in a nozzle, a spout swinging loosely over the nozzle and draining away from the standpipe, and a sup-

port for the spout pivoted at its
Insert C⁵, inner end to the standpipe ∧ and
5, 29, '05. secured at its outer end to the
spout about midway of its
length, substantially as described.

8. A water column comprising a standpipe terminating at its upper end in a nozzle, a draining away from the stand-
pipe in all its positions
5, 29, '05. swinging spout ∧ having a support pivoted to
at a point below the outlet end
of the pipe
" " the standpipe ∧ and provided with means whereby the standpipe may be swung about
Insert D'. horizontally, ∧ substantially as described.
July 29, '05. 9. A water column, comprising a standpipe terminating at its upper end in a nozzle, a swinging spout fitting loosely over the nozzle, and means for pivotally sup-orting the spout upon the standpipe, comprising a supporting frame pivoted at its inner end to the stand-
Insert C⁵, pipe ∧ and secured at its outer end to the
5, 29, '05. spout about midway of the length of the latter, and a brace extending between the inner end of the supporting frame and the inlet end of the spout, substantially as described.

10. A water column comprising a standpipe terminating in a nozzle, a spout swinging loosely over the nozzle, means for pivotally supporting the spout upon the standpipe comprising a supporting frame pivoted at its
Insert C⁵, inner end to the standpipe ∧ and secured at
5, 29, '05. its outer end at about midway of the spout, and a brace between the inner end of the supporting frame and the inlet end of the spout, and means for rotating the standpipe, substantially as described.

11. A water column, comprising a standpipe, terminating at its upper end in a reversely curved goose-neck, as shown, a swinging spout fitting loosely over the nozzle of the goose-neck, and a support for the spout pivoted to the standpipe, substantially as described.

[Vol. 18] 12. A water column comprising a standpipe terminating at its upper end in a reversely curved goose-neck,

as shown, a spout swinging loosely over the nozzle of the goose-neck and a support for the spout pivoted to the standpipe at the base of the goose-neck, the curvature of the goose-neck permitting the inlet end of the spout to swing backward past the vertical axis of its supporting pivot, substantially as described.

13. A water column, comprising a standpipe terminating in a nozzle, a spout swinging loosely over the nozzle, a support for the spout pivoted at its inner end to the standpipe about midway the length of the same

5, 29, '05. and secured at its outer end to the spout ∧ and counterbalancing devices applied between the these devices being connected to the standpipe and the support at points above the pivot

" " standpipe and spout support, ∧ substantially as described.

14. A water column comprising a standpipe terminating at its upper end in a nozzle, a spout swinging loosely over the nozzle, a support for the spout pivoted at its inner end to the standpipe and secured at its outer end to about midway the length of the same

" " the spout ∧ and counterbalancing springs applied between the standpipe and spout supthese devices being connected to the standpipe and the support at points above the pivot

" " port, ∧ substantially as described.

15. A water column, comprising a standpipe terminating at its upper end in a goose-neck, a swinging spout fitting loosely over the nozzle of the goose-neck, a support for the spout pivoted to the standpipe at the base of the goose-neck, and counterbalancing devices applied between the support and goose-neck, substantially as described.

16. A water column, comprising a standpipe terminating at its upper end in a nozzle, a swinging spout fitting loosely over the nozzle, a support for the spout pivoted to the standpipe and engaging the spout about midway of the length of the latter, a valve operating lever pivoted to the spout support, a valve at the base of the standpipe, and connections [fol. 19] between said valve and valve operating lever, substantially as described.

17. A water column, comprising a standpipe terminating at its upper end in a nozzle, a swinging spout fitting loosely over the nozzle, a support for the spout pivoted to the standpipe and engaging the spout about midway of the length of the latter, a valve operating lever pivoted to the spout support and extending longitudinally of the latter, a guide for the lever depending from the outer end of said support, a shoulder of said guide beneath which the lever may be caught, a valve at the base of the column, and connections between said valve and lever, substantially as described.

Insert C", 5, 29, '05.

(18. A water column comprising a standpipe terminating in a nozzle, and provided with projecting lugs for the pivotal attachment of the spout support and allowing space between them for the valve connections, a spout support pivoted to the lugs, and rigidly secured to a spout swinging over the nozzle, substantially as described.)

[Matter enclosed between rules erased in original transcript.]

19. A water column, comprising a standpipe terminating at its upper end in a nozzle, a swinging spout fitting loosely over the nozzle, a support for the spout pivoted to the standpipe, a valve operating lever pivoted to said spout support, a valve at the foot of the standpipe, and exterior connections extending down the standpipe between the lever and valve, substantially as described.

20. A water column comprising a standpipe terminating in a nozzle, a spout swinging loosely over the nozzle, a spout support pivoted to the standpipe and rigidly secured to the spout, a valve operating lever pivoted to said spout support, exterior valve connections between the lever and the valve hinged to said lever so that in the normally closed position of the valve the pivots and hinges lie in a common axis, and a valve at the foot of the standpipe, substantially as described.

pit, a

5, 29, '05. (21. A water column, comprising a ∧ standpipe swiveled in a vertical standard and pro-
[fol. 20] vided with a laterally projecting
Insert C[10]. spout ∧, and means tending to maintain a normally inward direction of this spout compris-
lower end of the
5, 29, '05. ing a cam-shaped flange on the ∧ standard, a
below the standard
" " yoke on the standpipe ∧, a lever pivoted to the yoke and provided with a roller riding upon the cam and a spring applied to force the roller against the cam, substantially as described.

pit, a

" " 22. A water column comprising a ∧ standpipe swiveled in a vertical standard and pro-
vided with a laterally projecting
See C[10]. spout ∧, and means tending to maintain a normally inward direction of this spout comprising a cam-
lower end of the
" " shaped flange on the ∧ standard a yoke on the
below the standard
standpipe ∧, a lever pivoted to the yoke and provided with a roller riding upon the cam and a spring applied to force the roller against the cam, said cam being made with concentric portions at its points of greatest diameter, and with seats for the roller at its points of least diameter, substantially as described.

[Matter enclosed between rules erased in original transcript.]

Insert C[11], 5, 29, '05.

23. A water column comprising a standpipe swiveled in a vertical standard, and a bearing between the standpipe and standard comprising a downwardly facing shoulder on the

standpipe, an upwardly facing shoulder on the standard, antifriction rollers inserted between said shoulders, and an annular cage enclosing said rollers to hold them between the shoulders, substantially as described.

24. A water column, comprising a standpipe swiveled in a vertical standard, and a bearing between the standpipe and standard comprising an outwardly facing annular bearing surface on the standpipe, an inwardly facing bearing surface on the standard, antifriction rollers inserted between said surfaces, and an annular cage enclosing said rollers to hold them between the bearing surfaces, substantially as described.)

[Matter enclosed between rules erased in original transcript.]

23 [25].* A water column, comprising a [fol. 21] standpipe swiveled in a vertical standard, and a bearing between the standpipe and standard comprising a downwardly an
5, 29, '05. and ∧ outwardly facing annular bearing sur- an
" " face on the standpipe, an upwardly and ∧ inwardly facing bearing surface on the standard inwardly and
a set or horizontal outwardly facing
" " ∧, antifriction rollers inserted between said ∧
Insert C[12]. surfaces, ∧ and an annular cage enclosing the
5, 29, '05. several rollers and holding them between the shoulders and bearing surfaces, substantially as described.

Erased, 5, 29, '05.

(26. A valve mechanism comprising a cylindric main valve, a housing into which the valve retreats, a cushioning chamber in said housing, and means for gradually admit-

---

[*Words and figures enclosed in brackets erased in original transcript.]

ting water to and quickly exhausting it from the cushioning chamber, substantially as described.

27. A valve mechanism comprising a cylindric main valve, a housing into which the valve retreats, a cushioning chamber in said housing, and an aperture in the main valve through which water may flow into and out of the cushioning chamber, substantially as described.

28. A valve mechanism comprising a cylindric main valve, a housing into which the valve retreats, a cushioning chamber in said housing, and a series of apertures of graded sizes through which water may flow into and out of the cushioning chamber, substantially as described.

29. A valve mechanism comprising a cylindric main valve, a housing into which the valve retreats, a cushioning chamber in said housing, and an inclined row of apertures arranged to be brought into operation in succession by the movement of the valve and through which water may flow into and out of the cushioning chamber, substantially as described.

30. A valve mechanism comprising a cylindric main valve, a housing into which the valve retreats, a cushioning chamber in said housing, an inclined row of apertures arranged [fol. 22] to be brought into operation in succession by the movement of the valve and through which water may flow into and out of the cushioning chamber, and a by-pass leading from the cushioning chamber, substantially as described.

31. A valve mechanism comprising a cylindric main valve, a housing into which the valve retreats, a cushioning chamber in said housing, an inclined row of apertures arranged to be brought into operation in succession by the movement of the valve through which water may flow into and out of the cushioning chamber and provided with an exterior valve for regulating the flow through the by-pass in the movement of the main valves, substantially as described.

32. A valve mechanism comprising a cylindic main valve, a housing into which the valve retreats, a leakage chamber within said housing having communication with the discharge pipe leading from the valve when the valve is closed, substantially as described.)

[Matter enclosed between rules erased in original transcript.]

5, 29, '05. 24 [26, 33].* A valve mechanism comprising a ∧ cylindric main valve ∧, a housing into which the valve retreats, a leakage chamber whose interior is in communication with the inlet when the valve is open within said housing, and an opening in the ∧ main valve through which communication is established between the leakage chamber and the discharge pipe leading from the valve when the valve is closed, substantially as described.

July 29, '05.

5, 29, '05. 25 [27, 34].* A valve mechanism comprising a ∧ cylindric main valve ∧, a housing into which the valve retreats ∧, a leakage chamber whose interior is in communication with the inlet when the valve is open within said housing ∧, and an inclined row of openings in the ∧ main valve communicating with the discharge pipe leading from the valve and arranged to be brought into communication with the leakage chamber in succession in the closing movement of the valve, substantially as described.

July 29, '05.

[fol. 23]

5, 29, '05. 26 [28, 35].* A valve mechanism comprising a ∧ cylindric main valve ∧, a housing into which the valve retreats ∧, a leakage chamber whose interior is in communication with the inlet when the valve is open within said housing ∧ and a series of aper-

[*Words and figures enclosed in brackets erased in original transcript.]

beyond the packing
side wall of the
5, 29, '05. tures of graded sizes in the ∧ main valve com-
July 29, '05. municating with the discharge pipe leading from the valve and arranged to be brought into communication with the leakage chamber in succession in the closing movement of the valve, substantially as described.

27 [29, 36].* A valve mechanism comprising a cylindric main valve, a housing into and provided with a packing through which the valve works
5, 29, '05. which the valve retreats ∧ , and a flange in beyond the packing
the housing ∧ dividing it into separate cushioning and leakage chambers, substantially as described.

28 [30, 37].* A valve mechanism comprising a cylindrical main valve, a housing into and provided with a packing through which the valve works
" " which the valve retreats ∧ , a flange in the beyond the packing
" " housing ∧ dividing it into separate cushioning and leakage chambers, and means permitting a suitable flow of water into and out of these chambers at appropriate times in the operation of the valve movement, substantially as described

29 [31, 38].* A valve mechanism comprising a cylindric main valve, a housing into and provided with a packing through which the valve works
" " which the valve retreats ∧ , a flange in the beyond the packing
" " housing ∧ dividing it into separate cushioning and leakage chambers, and an opening through the main valve communicating alter-
[fol. 24] nately with the cushioning and leakage chambers as the valve is opened and closed, substantially as described.

[*Words and figures enclosed in brackets erased in original transcript.]

30 [32, 39].* A valve mechanism comprising a cylindric main valve, a housing into and provided with a packing through which the valve works

5, 29, '05. which the valve retreats ∧ a flange in the beyond the packing

" " housing ∧ dividing it into separate cushioning and leakage chambers, and an inclined row of openings in the main valve arranged to be gradually brought into communication with the cushioning chamber and leakage chamber in alternation as the valve is opened and closed, substantially as described.

31 [33, 40].* A valve mechanism comprising a cylindric main valve, a housing into and provided with a packing through which the valve works

" " which the valve retreats ∧ a flange in the beyond the packing

" " housing ∧ dividing it into separate cushioning and leakage chambers, and a series of openings of graded sizes in the main valve arranged to be gradually brought into communication with the cushioning chamber and leakage chamber in alternation as the valve is opened and closed, substantially as described.

Insert C[13]. 32 [34, 41].* A valve mechanism comprishollow

5, 29, '05. ing a ∧ cylindric main valve, a housing into

" " which the valve retreats, ∧ a flange in the beyond the packing

" " housing ∧ dividing it into separate cushioning and leakage chambers, an opening through the main valve communicating alternately with the cushioning and leakage chambers as the valve is opened and closed, and a by-pass opening and into the discharge

" " out of the cushioning chamber ∧ , substantially as described.

[*Words and figures enclosed in brackets erased in original transcript.]

See C[16].

33 [35, 42].* A valve mechanism comprishollow

5, 29, '05. ing a ∧ cylindric main valve, a housing into

" " which the valve retreats, ∧ a flange in the beyond the packing

housing ∧ dividing it into separate cushioning and leakage chambers, an opening through [fol. 25] the main valve communicating alternately with the cushioning and leakage chambers as the valve is opened and closed, and an external valved by-pass opening out of and into the discharge

" " the cushioning chamber ∧ to regulate the movement of the main valve, substantially as described.

34 [36, 43].* A valve mechanism comprising a cylindric main valve, an annular seat for the valve, a housing into which the valve retreats, a hydraulic cylinder within the housing, and a piston within said cylinder connected with the main valve to open and close the latter, substantially as described.

Insert D[4], July 29, '05

---

37 ([44].* A valve mechanism comprising and a housing into which it rereats

" " a cylindric main valve ∧ , a hydraulic cylinwithin the housing

" " der, ∧ a piston within the hydraulic cylinder, a hollow piston rod connecting said piston and main valve, and a controlling valve within the hollow piston rod for controlling the admission of water to and its escape from said cylinder, substantially as described.

38 [45].* A valve mechanism comprising a and a housing into which it retreats

5, 29, '05. cylindric main valve ∧ , a hydraulic cylinder

[*Words and figures enclosed in brackets erased in original transcript.]

within the housing

5, 29, '05. ∧, a piston within the hydraulic cylinder, a hollow piston rod communicating with the inlet pipe and hydraulic cylinder and serving to connect said piston and main valve, and a hydraulic valve within the piston rod for controlling the admission of water to and its escape from said cylinder, substantially as described.)

[Matter enclosed between rules erased in original transcript.]

36, 39 [46].* A valve mechanism comprising a cylindric main valve, a hydraulic cylinder, a piston within the hydraulic cylinder, a hollow piston rod communicating with the inlet pipe and hydraulic cylinder and serving to connect said piston and main valve, a hydraulic valve within [fol. 26] the piston rod for controlling the admission of water to and its escape from said cylinder, and a hollow valve stem secured to the controlling valve and affording an exhaust passage from the hydraulic cylinder to the outlet pipe, substantially as described.

Insert C[11], 5, 29, '05.

(47. A valve mechanism comprising a cylindric main valve, a housing into which the valve retreats, a cushioning chamber in said housing provided with a valved outlet through which water may flow from but not into the cushioning chamber, substantially as described.

48. A valve mechanism comprising a cylindric main valve, a housing into which the valve retreats, and a cushioning chamber in said housing provided with a valved outlet in the main valve through which water may flow from but not into the cushioning chamber, substantially as described.

49. The combination with a water column, of a valve mechanism comprising a main valve, a seat for the valve, and a U-shaped discharge pipe forming a smoothly curved passage from the valve seat to the base of the water column, substantially as described.

50. The combination with a water column, of a valve mechanism comprising a cylindric main valve, an annular

---

[*Words and figures enclosed in brackets erased in original transcript.]

seat for the valve, a discharge pipe leading from the valve seat to the water column, and a curved deflector plate located concentrically above the valve seat when the main valve is raised and serving to guide the entering water smoothly into said discharge pipe, substantially as described.)

[Matter enclosed between rules erased in original transcript.]

Insert A, 6, 7, '04.>

(Paper No. 1, Rejection March 30, 1904)

This application has been examined.

A new oath is required, the case not having been filed within a reasonable time after the execution of the present oath. See Rule 46 and the Commissioner's decision in ex parte Branna, 97 O. G., 2533.

No section line 13-13 is shown in Fig. 1, as stated in the [fol. 27] description of Fig. 13; nor is line 16-16 shown in Fig. 15, as stated in the description of Fig. 16.

The following numerals are not on the drawing as stated; "56" is not on Fig. 9 as stated on page 8, line 22; "89", mentioned on page 12, line 8; "93", page 13, line 3.

The pet cock mentioned in line 12, page 9, is not in Fig. 9 as stated, nor is "valve 66" on Figs. 3 to 8 inclusive, as stated on page 14, line 5.

The following words are misspelled:—"may", page 10, line 25; "cushioning" in claim 31, line 2; and "opened", claim 39, line 7.

The following numerals should be changed, viz: on page 11, line 30, "85" to 85a; page 13, line 13, "87" to 81; page 13, line 15, "78" to 88; and page 13, line 24, "68" to 81.

It is thought that the connection of the parts 7 and 7a in Fig. 1 is incorrectly shown. The connection of these parts cannot be distinctly seen. Numerals 60, 65, 66, 67, 68 should be applied to Fig. 1 in order that the relation of the parts shown in detail to the general combination may be clearly indicated.

Claim 1 is rejected on Poage, #648,346, April 24, 1900, Water Distribution, Tanks.

Claims 2 and 3 fail to distinguish from the same patent. No material advantage is necessarily gained by pivoting a

support for the stand pipe "forward of the inlet end of the spout". The center of gravity of the spout is not thereby moved toward the point of support to any appreciable extent, as shown by applicant.

Claim 4 is rejected on Poage above cited. In applicant's construction the center of oscillation is about opposite the middle point of the arc of the circle which the delivery end of the spout describes in descending, in consequence of which said arc is the one which is nearest a vertical straight line. The claim does not define the essential features of this construction nor any novel feature that is material. See in this connection the patents to Probert, #420,889, Feb. 4, 1890, and Mansfield, #719,483, Feb. 3, 1903, both in the class above cited.

Claim 5 does not distingaish from Poage above cited and is rejected, since the operation of the parts as set forth is not materially different from that in the Poage device.

Claims 6, 7, and 9 are rejected on the same patent. See also Ketcham, #62,038, Feb. 12, 1867, and Shaw, #137,388, April 1, 1873, same class.

[fol. 28] Claim 8 is rejected on Probert above cited.

Claim 10 is rejected on Poage in view of Probert, showing the ball bearings.

Claim 13 is rejected on Poage above cited.

Claim 14 is rejected on Poage above cited as a full equivalent. A weight is the equivalent of a spring. See also Mansfield above cited which shows a spring balancing the spout.

Claim 18 is obscure in meaning but is apparently met in Henderson, #596,590, Jan. 4, 1898, same class.

Claim 21 is rejected on Mansfield above cited.

Claims 22, 23, 24, and 25 are met in terms in Mansfield, #429,141, June 3, 1890, same class, and are rejected. See also Cain, #618,222, Jan. 24, 1899, same class, and Probert above cited.

Claims 26 and 27 are rejected on Henderson, #642,118, Jan. 30, 1900, same class.

Claims 28, 29, 30, and 31, are rejected on Henderson #642,118 above cited, in view of Poage, #531,598, Dec. 25, 1894, same class, which shows a slow-closing valve with variable motion in closing. See also Schossow, #729,965, June 2, 1903, Baths and Closets, Water Closet Valves. The

arrangement of the perforations spirally is purely a matter of convenience. No new function is performed. Claim 31, moreover, is incomplete. It should state what two chambers the by-pass connects. For an example of a by-pass leading from the piston chamber to the discharge pipe see Schossow above cited and Gale, #570,727, Nov. 3, 1896, Water Distribution, Cocks and Faucets, Reciprocating Valves (Pressure Operated). The patent to Mack, #313,353, March 3, 1885, Pumps, Solid Reciprocating Piston, is cited to show the construction of a leakage chamber that could readily be adapted in applicant's device.

Claims 32, 33, 34, 35, 36, 37, 38, 39, 40, 41, 42, are rejected on Henderson #642,118 in view of Mack, both cited above. The same objection as to the connection of the by-pass is made to these claims that was noted in relation to claim 31.

Claims 44 and 45 are rejected on Hall, #509,847, Nov. 28, 1893, Hydraulic Motors, for Elevators, Valves.

Claims 47 and 48 are rejected on Henderson #642,118 above cited.

Claim 49 is substantially met in and is rejected upon Poage, #531,598, above cited, or Mohun et al., #616,682, Dec. 27, 1898, or Probert above cited, all in Water Distribution, Tanks, in view of Evertsen, #589,124, Aug. 31, [fol. 29] 1897, Cocks and Faucets, Reciprocating Valves, which shows the U-shaped pipe in substance.

Claim 50 is rejected on Mücke, #245,205, Aug. 2, 1881, Baths and Closets, Water Closet Valves.

The remaining claims may be allowed.

F. M. Tryon, Ex.

Dimick.

(Paper No. 2, Letter Suggesting Claim for Interference, May 31, 1904.)

In view of an interference in fact the following claim is suggested to applicant, under Rule 96, which claim should be entered by amendment before the expiration of thirty days from the date hereof, said time expiring June 30, 1904, if he desires to avail himself of his rights in said interference.

In accordance with the Commissioner's decision in ex parte Lombard, 43 O. G., 1347, applicant is required to

prosecute this case to appeal before the Board of Examiners-in-Chief before the above mentioned date, viz: June 30, 1904.

In a water column of the character described, the combination of a revoluble stand pipe, an extended discharge nozzle secured at the head thereof, a discharge pipe whose inner end is united loosely and telescopically with said discharge nozzle so as to be moved freely thereon, a pivoted link connection uniting said discharge pipe near its inner end with the stand pipe of the water column, and means for counter-balancing the discharge pipe, whereby said discharge pipe may be raised or lowered always in a vertical plane, no matter at what angle it may occupy to the track, substantially as described.

F. M. Tryon, Ex.

Dimick.

(Paper No. 3, Amendment "A," June 7, 1904)

Applicant hereby amends by adding the following claim:

See "C[illegible]".

A. (51. "In a water column of the character described, the combination of a revoluble stand pipe, an extended discharge nozzle secured at the head thereof, a discharge pipe whose inner end is united loosely and telescopically with said discharge nozzle so as to be moved freely thereon, a pivoted link connection uniting said discharge pipe near its inner end with the stand pipe of the water column, and means for counterbalancing the discharge pipe, [fol. 30] whereby said discharge pipe may be raised or lowered always in a vertical plane, no matter at what angle it may occupy to the track, substantially as described.")

Insert B, 12, 27, '04.>

[Matter enclosed between rules erased in original transcript.]

Very respectfully, Edward E. Johnson, by Henry W. Carter, His Attorney.

June 4, 1904.

(Paper No. 4, Letter Declaring Interference, August 9, 1904)

Your case, above referred to, is adjudged to interfere with others, hereafter specified, and the question of priority will be determined in conformity with the Rules.

The statement demanded by Rule 110 must be sealed up and filed on or before the 6 day of Sep. 1904, with the subject of the invention, and name of party filing it, indorsed on the envelope. The subject-matter involved in the interference is

In a water column of the character described, the combination of a revoluble stand pipe, an extended discharge nozzle secured at the head thereof, a discharge pipe whose inner ends is united loosely and telescopically with said discharge nozzle so as to be moved freely thereon, a pivoted link connection uniting said discharge pipe near its inner end with the stand pipe of the water column, and means for counterbalancing the discharge pipe, whereby said discharge pipe may be raised or lowered always in a vertical plane, no matter at what angle it may occupy to the track substantially as described.

The interference involves your application above identified and,

An application for "Water Column," filed by Frank M. Foster, of 805 Mount Hope Ave., Price Hill, Cincinnati, Ohio, whose attorney is Chas. M. Peck, of 604 Johnson Bldg., Cincinnati, Ohio, and whose assignee is The American Valve & Meter Company, of Cincinnati, Ohio.

The issue is your claim 51 and Foster's claim 1.

F. M. Tryon, Ex.

Dimick.

[fol. 31] (Paper No. 5, Associate Power of Attorney to Davis & Davis, September 19, 1904)

Hon. Commissioner of Patents, Washington, D. C.

Sir: I hereby appoint Messrs. C. D. & W. R. Davis, composing the firm of Davis & Davis, 908-914 G St., Northwest, Washington, D. C., as associate attorneys with myself in the further prosecution of the above entitled application.

Henry W. Carter.

September 16, 1904.

(Paper No. 6, Letter Suggesting Claim for Interference, December 13, 1904)

The following claim is suggested to applicant under Rule 96 for the purpose of interference:

In a water column, of the character described, the combination with a stand pipe of an extended discharge nozzle secured at the head thereof, a discharge pipe whose inner end telescopes with said discharge nozzle so as to be moved freely thereon, a connection uniting said discharge pipe with the stand pipe of the water column and pivoted to said stand pipe in a horizontal plane below the horizontal plane of the outlet of the discharge pipe when in its fully elevated position, and means for counterbalancing the discharge pipe, whereby the range of movement of said outlet is in a substantially vertical plane.

If applicant wishes to preserve his rights in the interference this claim should be presented within thirty days from and after the date hereof.

F. M. Tryon, Ex.

Dimick.

(Paper No. 7, Amendment "B," December 27, 1904)

Hon. Commissioner of Patents, Washington, D. C.

Sir: Applicant hereby amends by adding the following claim:

B. "38 [41]* 51. In a water column, of the character described, the combination with a stand pipe of an extended discharge nozzle secured at the head thereof, a discharge pipe whose inner end telescopes [fol. 32] with said discharge nozzle so as to be moved freely thereon, a connection uniting said discharge pipe with the stand pipe of the water column and pivoted to said stand pipe in a horizontal plane below the horizontal plane of the outlet of the discharge pipe when in its fully elevated position, and means for counterbalancing the discharge pipe, whereby the

[*Words and figures enclosed in brackets erased in original transcript.]

range of movement of said outlet is in a substantially vertical plane."

Respectfully submitted, Edward E. Johnson, by Henry W. Carter, His Attorney.

December 23, 1904.

(Paper No. 8. Rejection, January 21, 1905)

This application has been considered as amended Dec. 27, 1904.

Claim 51 is rejected on Poage, of record.

Applicant's new claim 51, inserted by the last amendment, has been numbered 52. This claim may be allowed.

The claims formerly rejected stand rejected, and the Office awaits action by applicant.

E. M. Tryon, Ex.

Dimick.

(Paper No. 9, Amendment "C," May 29, 1905)

Hon. Commissioner of Patents.

SIR: At the beginning of the last paragraph on page 1, insert:

C. The present improvements have relation particularly to the most desirable type of this class of apparatus, namely, the type in which the spout is pivoted to the standpipe at a point below the end thereof, and telescopes at its inner end loosely over turned the downward / end or nozzle portion of the standpipe.

The missing reference numerals have been supplied to the drawings.

Page 4, line 10 from the bottom, change "latter" to spout line 8 from the bottom, after "end" insert

to oppositely projecting lugs 8^a.

Page 5, lines 7 and 8, change "the necessary" to a sufficient. At the end of this paragraph cancel the period and [fol. 33] insert

C'. to permit its inlet end to extend to a point back of a vertical line drawn through the pivot 8 when the spout is in its uppermost position and at the same time insure such a position of the spout that it will drain freely away from the standpipe.

In the last line of page 5, cancel "which extend" and insert

C². the lugs 8ª being laterally curved to permit this connection with rods 15 to be made in vertical alignment with the pivots 8. The rods 15 extend centrally.

Page 10, line 25, change "my" to may.
Page 11, line 30, add a to "85."
Page 13, line 13, change "87" to 81; same page, line 15, change "78" to 88; same page, line 24, change "68" to 81.
Claim 1, line 3, after "nozzle" insert

and draining away from the standpipe.

Make the same amendment in claim 2; also amend claim 2 by inserting after "point" line 4,

C³. approximately opposite the middle point of the arc the delivery end of the spout describes in descending and ascending.

Amend the specification further by inserting after "and" 7th line from the bottom of page 4,

C⁴. the words approximately opposite the middle point of the arc the delivery end of the spout is usually required to describe in being adjusted to tanks of the average height.

Claim 5, line 4, after "standpipe" insert

C⁵. approximately opposite the middle point of the arc the delivery end of the spout is usually required to describe in being adjusted to tanks of the average height.

Claim 6, line 3, after "nozzle" insert

and draining away from the standpipe.

Claim 7, at the beginning of line 5, insert

C⁶. at a point approximately opposite the middle point of the arc the delivery end of the spout is usually re- [fol. 34] quired to describe in being adjusted to tanks of the average height

Claim 8, line 2, after "spout" insert

draining away from the standpipe in all its positions;

line 3, after "standpipe" insert

at a point below the outlet end of the spout.

Claim 9, line 5, after "standpipe" insert

C⁷. at a point approximately opposite the middle point of the arc the delivery end of the spout is usually required to describe in being adjusted to tanks of the average height.

Claim 10, line 5, after "standpipe" insert

C⁸. at a point approximately opposite the middle point of the arc the delivery end of the spout is usually required to describe in being adjusted to tanks of the average height.

Amend claim 13 by inserting after "spout" line 4,

about midway the length of the same;

also before "substantially" last line insert

these devices being connected to the standpipe and the support at points above the pivot

Claim 14, make the same amendments.
Cancel claim 18 and insert,

C[9]. 18. A water column, comprising a standpipe terminating at its upper end in a nozzle, a pair of oppositely extending curved lugs 8[a] carried by the standard, a spout having its inlet and telescoping over the nozzle said spout inclining downwardly away from the standpipe, a supporting frame attached to the spout and pivoted at its inner end to said lugs; a valve at the foot of the standpipe, valve operating rods at opposite sides of the standpipe and working in line with the pivots of the spout carrying frame, and means on this frame for reciprocating said rods, for the purposes set forth.

(Claim 21, line 1, after "a" insert pit, a line 3, after "spout" insert

line 3, after "spout" insert

C[10]. said standard depending into the pit and having [fol. 35] the standpipe passing through it.

Line 5, insert before "standard" the words

lower end of the

Further on in the same line, insert

below the standard

after the word "standpipe".

Canceled July 29, '05.

Claim 22 make the same amendments. Page 7, line 8, change "11" to 1; line 10, after "4", insert

within the pit and above the frost-floor p'; line 15, change "opposed" to opposite

---

[Matter enclosed between rules erased in original transcript.]

Cancel claims 23 and 24 and insert:

C[11]. 21 [23].* In a water column, of the character described, the combination with a standpipe having / an ex-

---

[*Words and figures enclosed in brackets erased in original transcript.]

tended discharge nozzle secured at the head thereof, a discharge pipe whose inner end telescopes with said discharge nozzle so as to be moved freely thereon, and which inclines downwardly away from said nozzle in all its positions, a connection uniting said discharge pipe with the standpipe of the water column and pivoted to said standpipe in a horizontal plane below the horizontal plane of the outlet of the discharge pipe when in its fully elevated position ^, and means for counter-balancing the discharge pipe, whereby the range of movement of said outlet is in a substantially vertical plane.

Insert D³. July 29, '05.

22 [24].* A water column, comprising a standpipe terminating at its outer end in a reversely curved goose-neck nozzle, a swinging spout fitting loosely at its upper inlet end over said nozzle, and inclining downwardly away from the nozzle in all its positions, a support for the spout pivoted to the standpipe at a point below the discharge end of the spout, said reversely curved goose-neck permitting the inlet end of the spout to swing backward past the vertical plane of the supporting pivot, substantially set forth.

Amend claim 25 as follows:

Line 3, after "and" second occurrence, insert an; at the beginning of line 5 insert an; line 5, after "standard" insert

a set of horizontal;

[fol. 36] next line, after "said" insert

inwardly and outwardly facing;

same line, before "and" insert

C¹². a set of vertical rollers between the downwardly and upwardly facing surfaces.

The foregoing claims are re-submitted with the amendments indicated. We find nothing in the art cited to sug-

[*Words and figures enclosed in brackets erased in original transcript.]

gest the novel idea embodied in applicant's structure. The defect he sets forth in his specification as existing in this type of water column was known to exist for a considerable length of time before his invention, but none of the inventors working on this type of water column succeeded in overcoming the defect, in fact the defect was considered inevitable with this type of water column. Applicant's construction completely overcomes the drawback set forth to the use of this type of apparatus, this result being accomplished by locating the pivot of the supporting frame at a suitable point below the discharge end of the spout and so shaping the nozzle that the inlet end thereof might pass beyond the vertical plane of the pivot so that even in its uppermost position the spout should drain away from the standpipe. Of course the most desirable point at which to locate the pivot is at a point approximately opposite the middle point of the arc the delivery end of the spout is usually required to describe in being adjusted to tanks of the average height, but it is submitted that applicant should not be confined in this respect.

As regards claims 13 and 14, the reference cited does not show a construction whereby the counterbalancing can be applied between the standpipe and the pivoted spout support. Poage's spout support is a lug and affords no room or leverage for applying a counterbalancing force. In Poage the counterbalancing exerts the same effect on the spout in all positions, whereas in applicant's arrangement the counterbalancing effect decreases as the spout swings downward so that by proper proportioning of the parts it allows the weight of the spout to overcome the spring and hold the spout down while in use, while at the same time when the spout is raised part way up the spring will again preponderate and carry the spout automatically to its uppermost position.

Regarding claims 21 and 22, the Office will note that in Mansfield the cam is upon the standpipe, while in applicant's construction the cam is fixed to the lower end of the [fol. 37] standard at the top of the pit where it is above the frost-floor and out of the way of injury from water.

In regard to claim 25: The turning bearing on a water column is exposed to much dirt, cinders, snow, frost and rain and therefore, if refined is liable to rust and stick fast. References show ball-bearings which are open to this objection. Applicant's construction shows a form of bearing for few points of support in each plane, the rollers being guided by the floating ring or annular cage, which, while guiding the rollers sufficiently gives plenty of room for the dirt to sift through the bearing without clogging it.

Cancel claims 26 to 32 inclusive.

Claim 33, insert hollow before "cylindric", line 1 line 2, after "valve" first occurrence, insert

> whose interior is in communication with the inlet when the valve is open.

Claim 34, line 1, insert hollow before "cylindric"; line 2, after "valve", first occurrence, insert

> whose interior is in communication with the inlet when the valve is open

; line 2, after "retreats" insert

> a packing through which the valve works

; line 3, after "housing" insert

> beyond the packing

Claim 35, make the same amendments.

Claim 36, line 2 after "retreats" insert

> and provided with a packing through which the valve works

; next line, after "housing" insert

> beyond the packing

Make the same amendments in claims 37, 38, 39 and 40.

Claim 41, line 1, insert hollow after "a". Line 2, after "retreats" insert

> C[13]. a packing for the valve separating the waer inlet from the interior of said housing

; line 3, insert beyond the packing after "housing"; last line of this claim insert after "chamber" the words

and into the discharge

Make the same amendments in claim 42.
Claim 44, after "valve" insert

and a housing into which it retreats

; same line, after "cylinder" insert

within the housing.

Make the same amendments in claim 45.
Cancel claims 47, 48, 49, 50 and 51 and insert:

C[14]. [fol. 38] 37 [40].* A valve mechanism comprising an inlet chamber and an outlet chamber, a ring inlet
July 29, '05. valve-seat surrounded by the [outlet]* chamber, a hollow cylindric main valve adapted to seat on said ring and having its interior open to the inlet chamber when the valve is open, a housing into which the valve retreats separated from the inlet cham- an annular partition
July 29, '05. ber by a packing [means]* for dividing the housing into a leakage chamber, and a cushioning chamber, a
" " " [valved]* by pass connecting the cushing chamber with the discharge chamber, means for operating the valve, said valve being provided with openings in i-s side wall, adapted to alternately communicate with the cushion chamber and the leakage chamber, and a normally closed valve in its head, said valve opening inwardly with respect to the main valve.

Respectfully, Davis & Davis, Asso. Attys.

May 15/05.

[*Words and figures enclosed in brackets erased in original transcript.]

(Paper No. 10, Rejection, June 23, 1905)

This application has been considered as amended May 29, 1905.

The petcock 68 should be shown in every figure of the drawing. Reference numeral 8a is not found on the drawing.

A new oath should be filed as required.

Claims 2, 5, 7, 9, 10, 13, 14, 18, 24, and 25 may be allowed.

Claim 23 is rejected on Poage, of record, or Fenner, #782,496, Feb. 14, 1905 (application filed March 21, 1904), Water Distribution, Tanks.

Claim 40 is rejected on Henderson in view of Mack, both of record. See also O'Connor et al., #531,212, Dec. 18, 1894, and Woodbury, #638,900, Dec. 12, 1899, both in Baths and Closets, Closet Cisterns.

Claim 8 is rejected on Probert in view of Poage, both of record.

The former office action on the remaining claims is repeated.

[fol. 39] The patent to Gale, #570,727, Nov. 3, 1896, Water Distribution, Cocks and Faucets, Reciprocating Valves, is cited as an instance where the water back of the valve piston leads to the waste pipe. See claim 34.

The patent to Field, #699,377, May 6, 1902, Cocks and Faucets, Reciprocating Valves, is cited to show the spiral arrangement of holes in a cylinder.

F. M. Tyron, Ex.

Dimick.

(Paper No. 11, Amendment "D," July 29, 1905)

The drawing has been corrected as requested.

Claim 1, line 4, after "point" insert

D. —approximately opposite the middle point of the arc the delivery end of the spout is usually required to describe in being adjusted to tanks of the average height and—.

Claim 3, line 4, make the same amendment.

Claim 4, line 4, make the same amendment.

Claim 6, line 4, make the same amendment.

Claim 8, line 4, before "substantially" insert—

D'. said pivot being located approximately opposite the middle point of the arc the delivery end of the spout is usually required to describe in being adjusted to tanks of the average height—.

Cancel claims 21 and 22 and insert:—

Erased 10, 7, '05.

D². (21. A water-column, comprising a pit having extending across it below its cover a frost floor, a vertical standard depending into said pit but terminating above said frost floor and carrying a cam-shaped flange on its lower end, a standpipe passing through and swiveled in said standard and carrying at a point below the standard means co-operating with said flange to maintain a normally inward direction of the spout carried by the standpipe.

22. A water column comprising a pit, this pit being divided horizontally by a frost-floor supported in it at a point below its cover, a tubular standard extending down through the cover and terminating short of the frost-floor and provided at its lower end with a cam-shaped flange, a spouted [fol. 40] standpipe passing down through said standard and swiveled in it, and means carried by the standard to co-operate with said flange to turn the spout normally inward, said means comprising a yoke attached to the standpipe, a lever pivoted to the yoke and provided with a roller riding upon the cam, and a spring applied to force the roller against the cam, substantially as set forth.)

[Matter enclosed between rules erased in original transcript.]

With regard to the above claims the examiner will note that in Mansfield the cam is upon the standpipe, while in applicant's construction the cam is fixed to the lower end of the standpipe above the frost floor, where it will be out of the way from injury from water.

Claim 23, line 10, after "position" insert

D³. —at a point approximately opposite the middle point of the arc the delivery end of the spout is usually required to describe in being adjusted to tanks of the average height—.

Amend claim 26 by inserting the word-

—side wall of the—

before "main", line 3. Make the same amendment in claim 27 in line 4. Make the same amendment in line 4 of claim 28.

With the above amendments claims 26, 27 and 28 are re-submitted. In the Henderson patent #642,118 we fail to find matter meeting either the terms or the spirit of these claims. In Henderson the leakage pipe N is in communication directly with the standpipe L around the stem of the piston valve that Henderson employs, which is essentially different from applicant's structure in which the leakage chamber surrounds a hollow cylindrical valve and is put into communication with the standpipe when the valve is closed by holes formed in the side wall of this hollow valve. This difference in construction avoids the necessity of using Henderson's closing piston and other parts of his peculiar mechanism. As shown in Fig. 9 of applicant's drawing, the subject-matter of these claims is capable of being embodied in a very simple and efficient structure.

With regard to claim 29, we are unable to apply the Henderson and Mack references. Neither seems so far as we can see to show the equivalent of a housing into which the cylindric valve retreats, said housing being divided by an annular packing and an annular flange into separate cush-[fol. 41] ioning and leakage chambers, and we respectfully ask that the examiner define his position more clearly with regard to this claim.

Claims 30, 31, 32, 33, 34 and 35 are re-submitted in connection with claim 29 and we ask the examiner for the same information with regard also to these claims. With regard to the Mack patent there seems to be nothing pertinent to these claims notwithstanding the fact that Mack shows a by-pass connecting the inlet of the pump to an annular leakage chamber surrounding the piston thereof.

Claim- 37 and 38 seem to embrace patentable novelty but with a view of bringing out the novelty sought to be covered thereby we request that they be re-written as follows:

Erased, 10, 7, '05.

(37. In combination with a casing having an annular valve seat surrounding the outlet, a housing connected to said casing, a cylindric main valve adapted to seat on said valve seat and adapted to retreat into said housing when it is open, a hydraulic cylinder extending into said housing, a piston working in said hydraulic cylinder and connected by a hollow piston rod to said main valve, and a controlling valve within the hollow piston rod, substantially as set forth.)

[Matter enclosed between rules erased in original transcript.]

D[t]. 35 [38].* In combination with a casing having an annular valve seat surrounding the outlet, a housing connected to said casing, a cylindric main valve adapted to seat on said valve seat and adapted to retreat into said housing when it is open, a hydraulic cylinder extending into said housing, a piston working in said hydraulic cylinder and connected by a hollow piston rod to said main valve, said hollow piston rod being in communication at its inner end with the inlet of the casing, and a controlling valve within the hollow piston rod, substantially as set forth.

Amend claim 40 by changing "outlet" at the end of line 2 to

—inlet—.

Line 6, cancel "means" and insert

—an annular partition—.

Line 7, cancel "valved". Claim 40 appears to be clearly not met by the Henderson and Mack patents or the new references cited. We fail to find in the references a housing

[*Words and figures enclosed in brackets erased in original transcript.]

surrounding the cylindric valve and divided by an annular partition into a leakage chamber and a cushioning cham- [fol. 42] ber, the cushioning chamber being connected to the discharge pipe by means of a by-pass, and these two chambers being so arranged and adapted as to co-operate with a cylindric valve having openings in its side wall which are adapted to alternately communicate with said two chambers and which is provided with a valve in its head adapted to open inwardly into the interior of the valve whereby it will close automatically when the main valve is closed down and will open freely when the main valve is open.

Respectfully,

Davis & Davis, Asso. Attys.

(Paper No. 13, Rejection, October 6, 1905)

This application has been considered as amended July 29, 1905.

On page 4, the second sentence in the second paragraph is rendered by the last amendment too long to be perspicuous. This can be remedied by the erasure of the word "which", in line 7 from the bottom of page 4, and inserting a period and the words The framework.

The following changes in reference numerals are required: on page 6, line 26, "9" to 29; in line 29, "31" to 33; on page 7, line 17, "26" and "33" to 36 and 35, respectively; and on page 14, line 3, "66" to 75.

On the left hand side of Fig. 9 the lead line to numeral 61 is wanting, it having been directed to 68 instead.

Claims 21 and 22 are rejected as containing only aggregations of elements disclosed in the patents to Gulland #675,889, June 11, 1901, Water Distribution, Tanks, and Mansfield, of record, the one showing the frost floor, the other the cam device.

Claim 37 is rejected on Hall, of record.

The remaining claims may be allowed.

F. M. Tryon, Ex.

C. L. Wolcott.

(Paper No. 14, Amendment October 7, 1905)

Page 4, line 7 from the bottom of the page, erase the word "which" and insert a period; after the period insert the words "The Framework".

Page 6, line 26, change "9" to "29"; line 29, change "31" to "33".

[fol. 43] Page 7, line 17, change "26" and "33" to "36" and "35" respectively.

Page 14, line 3, change "66" to "75".

On the left hand side of Fig. 9 change the lead line which is directed to 68 to the numeral 61.

Cancel claims 21, 22, and 37.

Respectfully,

Davis & Davis, Asso. Attys.

[fol. 44] DEFENDANT'S EXHIBIT No. 3

File Wrapper and Contents of Foster Patent

Application Serial No. 190,313 to Frank M. Foster. Water-Column. Application executed November 20, 1903. New Oaths executed Mch. 29, 1904, Feb. 3, 1905. Filed complete January 23, 1904. Serial No. 190,313. Attorney, Chas. M. Peck, Cincinnati, Ohio.

Contents

Print, August 1, 1904.
Application, O. K. papers.
1. Rej. February 4, 1904.
2. Amendment "A" and New Oath Mch. 29, 1904.
3. Letter May 31, 1904.
4. Letter to Office June 30, 1904.
5. Interference letter Aug. 9, 1904.
6. " " (corrected) Aug. 30, 1904.
7. Claim suggested Dec. 13, 1904.
8. Letter to Office Jan. 16, 1905.
9. Letter Jan. 21, 1905.
10. New Oath Feb. 3, 1905.

Specification

To all whom it may concern:

Be it known that I, Frank M. Foster, a citizen of the United States, residing at Cincinnati, in the County of Hamilton, and State of Ohio, have invented certain new and useful improvements in Water Columns, of which the following

is a full, clear and exact description, reference being had to the accompanying drawing forming part of this specification.

My invention relates to that class of water columns which have a loose jointed connection between the delivery spout which conveys the water into the tender tank of a locomotive, and a projecting curved spout extending from the head of the stand-pipe of the column, the delivery spout being so coupled to the curved spout and supported by the stand pipe that it can swing with its delivery end practically in a vertical plane from its highest to its lowest position, thus accommodating it to tenders of different height and giving it a wide range of action.

The novelty of my invention will be hereinafter more fully set forth and specifically pointed out in the claims.

In the accompanying drawing, the figure represents in [fol. 45] side elevation, a water column part-y in section, or rather so much thereof as is necessary to illustrate my invention.

From the base A of the stand-pipe extends upward the continuation of the column E, having suitably secured at its top a laterally and downwardly projecting coupling nozzle C, over which is loosely fitted the final discharge pipe D with the usual outer curved downward end E. This discharge pipe D has pivoted to it, as at a, on each side near its inner end a link b, said link being preferably pivoted to a collar or band c surrounding the pipe D. The lower ends of the links b are pivoted, as at e, to the column B and preferably to a band or collar f surrounding the column, and said band is preferably adjustable on the column up or down, as desired, and is secured rigid to the column in its adjusted positions.

The pipe D is counterbalanced by a weight F, in this instance guided on a rod g secured to brackets projecting from the column B, and has secured to its upper end a chain journaled in brackets h which passes up over a guide pulley i ∧ projecting from the head of the spout C. From the pulley i the chain extends horizontally over another guide pulley j journaled to a bracket frame k secured to and projecting from the head of the column over the spout D, the pulley being located at or near the middle of the spout, and the end of the chain

being connected to the spout, as at l. Also secured to the bracket frame k is a vertical standard m whose lower end is forked and straddles the spout D to limit its upward movement, and said standard also serves as a guide for the lever n which actuates the valve mechanism, not shown, at the base of the column, which forms no part of my present invention, and may be of any suitable construction.

When the spout is up and entirely out of the way of passing trains, as seen by the solid lines in the figure, its inner end completely envelops the nozzle C and rests against the head of the stand-pipe, but when it is desired to supply a tender tank with water, the spout D is pulled down, swinging on the pivoted links b to the position indicated by the dotted lines in the Figure, when the discharge end of the pipe D will enter the man-hole of the tank, and then the water is turned on.

In the Figure the two extreme positions of the pipe D are shown and it will be observed that in the extreme low position the inner end of the pipe D will not be entirely withdrawn from the outer end of the nozzle C, so that there will [fol. 46] be no wasting of water whatever, and there will be free access of air to the interior of the upper end of the pipe D, thus ensuring a perfectly free flow of water through the pipe D.

Of course the pipe D will only be lowered sufficiently to suit the height of the particular tank to be filled and it will be observed that a large range of movement is obtained for this purpose without taking the discharge end E of the pipe

parallel with the track,

D out of a vertical plane ∧ so that in whatever position of elevation it may be, it will always come over the filling hole of the tank.

The water column is so constructed that it may be swung to carry the delivery pipe entirely to either side and off the track, as is common in this class of water columns.

Having thus fully described my invention I claim:

Insert A, 3, 29, '04

(1. In a water column of the character described, the combination of a stand pipe, an extended discharge nozzle secured at the head thereof, a discharge pipe whose inner

end is united loosely and telescopically with said discharge so as to be moved freely thereon, a pivoted link connection uniting said discharge pipe near its inner end with the stand pipe of the water column at a distance below the lower end of the discharge nozzle, and means for counterbalancing the discharge pipe, substantially as described.)

[Matter enclosed between rules erased in original transcript.]

2. In a water column of the character described, the combination of a stand pipe, an extended downwardly curved discharge nozzle secured at the head thereof, a discharge pipe, whose inner end is united loosely and telescopically with said discharge nozzle so as to be moved freely thereon, pivoted links whose upper ends are pivoted to a band surrounding the discharge pipe near its inner end and whose lower ends are pivoted to a band adjustably secured upon the stand pipe at a distance below the lower end of the discharge nozzle, and means for counterbalancing the discharge pipe, substantially as described.

Frank M. Foster.

Witnesses: Edward Peck, Edward Sussdorf.

[fol. 47] (Paper No. 1, Rejection February 4, 1904)

This application has been examined.

A new oath is required, the case not having been filed within a reasonable time after the execution of the present oath. See Rule 46 and the Commissioner's decision in ex parte Branna, 97 O. G. 2533.

Claim 1 is rejected on Street, #444,143, Jan. 6, 1891, Water Distribution, Tanks.

Claim 2 may be allowed.

F. M. Tryon, Ex.

Dimick.

(Paper No. 2, Amendment "A" and New Oath)

Hon. Commissioner of Patents.

Sir:

In reply to Office letter of February 4th, 1904, I enclose herewith a new oath as required, and I herewith amend my

above application by erasing claim 1 and substituting therefor the following:

A. "1. In a water column of the character described, the combination of a revoluble stand pipe, an extended discharge nozzle secured at the head thereof, a discharge pipe whose inner end is united loosely and telescopically with said discharge nozzle so as to be moved freely thereon, a pivoted link connection uniting said discharge pipe near its inner end with the stand pipe of the water column, and means for counterbalancing the discharge pipe, whereby said discharge pipe may be raised or lower- always in a vertical plane, no matter at what angle it may occupy to the track substantially as described."

By the above amendment it is believed that claim 1 is now clearly distinguished from the Street patent, in which the delivery spout has only limited play up and down, no provision for sidewise movement, and little if any in and out play. It could not accomplish the functions possessed by my construction.

I would therefore beg a reconsideration and allowance of the application.

Very respectfully, Frank M. Foster, by Chas. H. Peck, His Atty.

[fol. 48] (Paper No. 3, Letter May 31, 1904)

This application has been considered as amended March 29, 1904.

The claims may be allowed. In view of an interference in fact existing between this application and other applications, under Rule 96, the following claim is suggested to applicant said claim to be entered within thirty days from the date hereof, which period expires on June 30, 1904, if applicant desires to avail himself of his rights in this interference.

In a water column of the character described, the combination of a stand-pipe, an extended discharge nozzle secured at the head thereof, a bracket arm likewise secured to the head of the column and extending therefrom above

the discharge nozzle, a discharge pipe whose inner end is united loosely and telescopically and non-pivotally with said discharge nozzle so as to be moved freely thereon, mechanism for supporting said discharge pipe from said bracket arm in such manner as to permit the movement of said discharge pipe up and down at its outer end and in and out over said discharge nozzle at its inner end, substantially as described.

A copy of this letter is mailed to applicant in person under Rule 97, since the attorney of record is the same in this and one of the interfering cases.

F. M. Tryon, Ex.

Dimick.

(Paper No. 4, Letter to Office June 30, 1904)

Hon. Commissioner of Patents.

SIR:

Replying to Office letter of the 31st ult, I would say that I have carefully examined the application of Mr. Nicholas Paul Fenner, Jr., Serial No. 199,136, filed March 21st, 1904, which application, together with this one, is to be owned and controlled by the American Valve & Meter Company, of which Mr. Fenner is President and General Manager, and of which I am Secretary and Treasurer, and I cannot see that there is any interference in fact between my above application and that of Mr. Fenner mentioned.

The claim suggested for me to put into my application is taken from Mr. Fenner's case, and could not be read on my construction. For instance, I have no "discharge pipe whose inner end is united loosely and telescopically and non-pivotally," but on the contrary my discharge pipe is connected by the pivoted links b with the ring f on the water column and with the ring e on the discharge pipe, and I [fol. 49] think it would simply be a waste of time to follow the Examiner's suggestion and have an interference declared, for there would simply be a concession of priority on my part for the new claim in my case to Mr. Fenner, and a concession of priority by Mr. Fenner on the new claim in his case to me, and the matter would stand exactly as it does now, but aside this matter of inexpediency I do

not consider, as above pointed out, that there is any interference in fact, and would beg an allowance of my case as it stands.

Very respectfully, Frank M. Foster, by Chas. M. Peck, His Atty.

Cincinnati June 28th, 1904.

(Paper No. 5, Interference Letter Aug. 9, 1904)

Your case, above referred to, is adjudged to interfere with others hereafter specified, and the question of priority will be determined in conformity with the Rules.

The statement demanded by Rule 110 must be sealed up and filed on or before the 6 day of Sep., 1904, with the subject of the invention, and name of party filing it, indorsed on the envelope. The subject-matter involved in the interference is

Issue

In a water column of the character described the combination of a revoluble stand pipe, an extended discharge nozzle secured at the head thereof, a discharge pipe whose inner end is united loosely and telescopically with said discharge nozzle so as to be moved freely thereon, a pivoted link connection uniting said discharge pipe near its inner end with the standpipe of the water column, and means for counterbalancing the discharge pipe, whereby said discharge pipe may be raised or lowered always in a vertical plane, no matter at what angle it may occupy to the track, substantially as described.

The interference involves your application above identified and,

An application for Railway Water Columns filed by Edward E. Johnson, of St. Paul, Minn., C/o Chas. A. Stickney Co., whose attorney is Chas. M. Pack, of 604 Johnston Bldg., Cincinnati, Ohio, and whose assignee is The American Valve & Meter Company, of Cincinnati, Ohio (a Corp. of W. Va.).

The issue is your claim 1 and claim 51 of Johnson.

F. M. Tryon, Ex.

Dimick.

[fol. 50] (Paper No. 6, Interference Letter (corrected) August 30, 1904)

Your case, above referred to, is adjudged to interfere with others, hereafter specified, and the question of priority will be determined in conformity with the Rules.

The statement demanded by Rule 110 must be sealed up and filed on or before the 6th of Sept. 1904, with the subject of the invention, and name of party filing it, indorsed on the envelope. The subject-matter involved in the interference is

Issue

In a water column of the character described, the combination of a revoluble standpipe, an extended discharge nozzel secured at the head thereof, a discharge pipe whose inner end is united loosely and telescopically with said discharge nozzel so as to be moved freely thereon, a pivoted link connection uniting said discharge pipe near its inner end with the standpipe of the water column, and means for counterbalancing the discharge pipe, whereby said discharge pipe may be raised or lowered always in a vertical plane, no matter at what angle it may occupy to the track substantially as described.

The interference involves your application above identified and,

An application for Railway Water Columns filed by Edward E. Johnson of St. Paul ,Minn., c/o Chas. A. Stickney Co., whose attorney is Henry W. Carter, 1261 Monadnock Block, Chicago, Ill.

The issue is your claim 1 and Johnson's claim 51.

This is a substitute for the letter mailed to the applicant August 9, 1904, to correct an error therein.

F. M. Tryon, Ex.

(Paper No. 7, Claim Suggested Dec. 13, 1905)

The following claim is suggested to applicant under Rule 96 for the purpose of interference:

In a water column, of the character described, the combination with a standpipe of an extended discharge nozzle secured at the head thereof, a discharge pipe whose inner end telescopes with said discharge nozzle so as to be moved

freely thereon, a connection uniting said discharge pipe with the standpipe of the water column and pivoted to said stand pipe in a horizontal plane below the horizontal plane of the outlet of the discharge pipe when in its fully elevated position, and means for counterbalancing the discharge pipe, [fol. 51] whereby the range of movement of said outlet is in a substantially vertical plane.

If applicant wishes to preserve his rights in this interference this claim should be presented within thirty days from and after the date hereof.

F. M. Tryon, Ex.

Dimick. O.

(Paper No. 8, Letter to Office Jan. 16, 1905)

Hon. Commissioner of Patents.

SIR:

Replying to Office Letter of the 13th ult. suggesting an interference, by the addition of a new claim, would say that I have carefully considered said claim as presented by the Office and do not see how it possibly could be read upon my construction. I do not think that there would be any interference in fact, with a construction containing the proposed claim and my claims and construction. I would therefore beg that my application be re-examined and passed to issue without further delay.

Very respectfully,
Frank M. Foster, by Chas. M. Peck, His Atty.

(Paper No. 9, Letter Jan. 21, 1905)

This application has been considered in view of applicant's letter to the Office filed Jan. 16, 1905.

When a new oath has been filed as required by the first Office letter the case may pass to issue as at present advised.

Dimick. F. M. Tryon, Ex.

[fol. 52] DEFENDANTS' EXHIBIT No. 4

File Wrapper and Contents of Fenner Patent

Application Serial No. 199,136 to Nicholas Paul Fenner, Jr. Water Column. Application executed March 14, 1904. Filed complete March 21, 1904. Attorney, Charles M. Peck, Cincinnati, Ohio.

Contents:

Specification:

Paper No. 1, Rejection April 11, 1904.
Paper No. 2, Amendment April 28, 1904.
Paper No. 3, Rejection May 19, 1904.
Paper No. 4, Amendment "A" May 23, 1904.
Paper No. 5, Letter May 31, 1904, from Patent Office.
Paper No. 6, Letter to office June 30, 1904.

Title:

Improvement in Water Column; Class 137—Water Distribution—Tanks

Specification

To all whom it may concern:

Be it known that I, Nicholas Paul Fenner, Jr., a citizen of the United States, residing at Cincinnati, in the County of Hamilton, and State of Ohio, have invented certain new and useful improvements in Water Columns, of which the following is a full, clear and exact description, reference being had to the accompanying drawing forming part of this specification.

My invention relates to that class of water columns which have a loose jointed connection between the delivery spout which conveys the water into the tendertank of a locomotive, and a projecting curved spout extending from the head of the standpipe of the column, the delivery pipe being so coupled, by a loose telescopic joint, to the curved spout and supported by novel means extending from the stand-pipe, so that it can swing with its delivery end practically in a vertical plane from its highest to its lowest position, thus

accommodating it to tenders of different height and giving it a wide range of action.

The novelty of my invention will be hereinafter more fully set forth and specifically pointed out in the claims.

[fol. 53] In the accompanying drawing:

Figure 1 represents in side elevation a water column partly in section and partly broken away, sufficient, however, being shown to illustrate the application of my invention thereto.

Figure 2 is a detail side elevation of a modification of the spout support.

Figure 3 is a plan view of the engaging loop secured to the column-swinging bracket, which supports the spout, and by means of which the person on the tender can grasp and swing the spout and column to bring the spout over the filling hole in the tender, and where the column is not an automatic return column, he can swing it back to bring the spout out of the line of and parallel with the track.

Figure 4 is a view corresponding to Fig. 2 representing a still further modification in the means for supporting the discharge pipe.

The same letters of reference are used to indicate identical parts in all the figures.

A represents the base of the stand-pipe from which extends upward the cloumn B turning thereon to C, preferably by automatic means of old and well known construction to swing the column and its discharge pipe away from and parallel with the track when not in use, and which permits the column to be swung in the opposite direction to bring the discharge pipe over the track so that its outer end may be lowered after being projected to engage the intake hole of the tank on the tender.

At the top of the column B is suitably secured a laterally and downwardly projecting coupling nozzle D over which is loosely fitted the inner end of the final discharge pipe E with the usual or any suitable downwardly curved spout F intended to come directly over the man-hole or intake of the tender when the pipe is properly drawn out and lowered.

Secured to an upward continuation of the nozzle D, in line with the column B is a laterally projecting bracket arm G, in this instance formed of channel iron and which extends over the nozzle D and in line therewith.

H with its counterweight ball I is the lever mechanism for operating the valve mechanism at the bottom of the column which valve mechanism is not shown but is of the usual or any suitable construction.

Secured to the pipe E, at or near the middle of its length, is a cable J which passes up over a pulley a pivoted to a ver- [fol. 54] tical arm L fast to the bracket arm G and whose upper end is looped to engage and serve as a guide for the lever H and whose lower end is forked and straddles the pipe E. The cable J extends from the pulley a to a pulley b pivoted to a bracket arm on the bracket arm G, just in rear of the column, over which it passes and thence extends downward parallel with the column B and has a weight K attached to its lower end and serving to counterbalance the weight of the pipe E and to slightly overbalance the same.

If desired there may be a pair of cables J side by side attached at their front ends to the pipe E and extending over adjacent parallel pulleys a and b with the weight K secured to both of them at the rear of the column in order to more readily balance the pipe E.

As a guide and support to the inner end of the pipe E, I provide a curved rod M, whose lower portion is substantially parallel to the curvature of the discharge nozzle B and whose ends are bent upward and secured to the bracket arm G, as shown in Fig. 1; and extending up from the inner end of the pipe E is an arm d encircling the pipe and having its upper ends above parallel and carrying between them a pivoted grooved roller e which rides upon the guide rod M. In Fig. 1, the pipe E is shown elevated in solid lines with the roller e adjacent to the head of the column, and in dotted lines it is shown projected and lowered for delivering water, with the roller e at the opposite end of the guide rod M which is looped and serves as a stop to limit the extreme outward movement of the pipe E.

The scale in dotted lines in Fig. 1 is intended to represent different degrees to which the discharge end of the pipe E may be raised or lowered and in this instance the scale graduations represent feet.

Projecting outwardly and downwardly from the outer end of the bracket arm G is a looped arm or rod N, Figs. 1 and 3 to enable the person on the tender to easily engage the same with a hook or other suitable instrument and draw

the column around from its position in which the pipe E is parallel with the track to a position in which said pipe extends over the track and is ready to be drawn outward and downward to a position proper to discharge water into the man-hole of a tender without waste or splashing. In Figure 2 I have shown a modification whereby the guide [fol. 55] rode M′ is secured to the pipe E and the rod d′ carrying the roller e′ is secured to the bracket arm G.

In Fig. 4 I have shown a still further modification in which the pendent arms of the guide rod M² are forked at their lower ends so as to straddle the pipe on each side thereof and there is a roller e_2 suitably pivoted on each side of the pipe E to engage the upper curved sides of the guide arms on both sides of the pipe.

By the foregoing construction I have provided a water column which is vertically adjustable, which will completely drain itself at all times, and in which there are no accurately fitted joints to retain water and freeze in winter; which is very easy to operate and which, after an operation will resume its normal position; which is very simple in construction and also inexpensive in construction besides being efficient in action.

Having thus fully described my invention I claim:

1. In a water column of the character described, the combination of a stand pipe, an extended discharge nozzle secured at the head thereof, a bracket arm likewise secured to the head of the column and extending therefrom above the discharge nozzle, a discharge pipe whose inner end is

telescopically and non-pivotally

4, 28, '04. united loosely and A [telescopically]* with said exchange nozzle so as to be moved freely thereon, mechanism for supporting said discharge pipe from said bracket arm in such manner as to permit the movement of said discharge pipe up and down at its outer end and in and out over said discharge nozzle at its inner end, substantially as described.

2. In a water column of the character described, the combination of a stand pipe, an extended discharge nozzle secured at the head thereof, a bracket arm likewise secured to the head of the column and extending therefrom above

[*Words and figures enclosed in brackets erased in original transcript.]

the discharge nozzle, a discharge pipe whose inner end is united loosely and telescopically with said discharge nozzle so as to be moved freely thereon, a track or way interposed between said bracket arm and discharge pipe and [fol. 56] secured to either, and a guide roller engaging said track or way and carried by the member opposite to that to which the track or way is secured, said roller serving to support the pipe and guide it in its movements, substantially as described.

Insert A, 5, 23, '04

(3. In a water column of the character described, the combination of a stand pipe, an extended discharge nozzle secured at the head thereof, a bracket arm likewise secured to the head of the column and extending therefrom above the discharge nozzle, a discharge pipe whose inner end is united loosely and telescopically to said discharge nozzle so as to be moved freely thereon, a track or way secured to the inner end of the discharge pipe and engaging said track or way, said roller serving to support the pipe and guide it in its movements, substantially as described.)

[Matter enclosed between rules erased in original transcript.]

4. In a water column of the character described, the combination of a standpipe, an extended discharge nozzle secured at the head thereof, a bracket arm likewise secured to the head of the column and extending therefrom above the discharge nozzle, a discharge pipe whose inner end is

and non-pivotally

4, 28, '04. united loosely and telescopically ∧ with said discharge nozzle so as to be moved freely thereon, mechanism for supporting said discharge pipe from said bracket arm in such manner as to permit the movement of said discharge pipe up and down at its outer end and in and out over said discharge nozzle at its inner end, and an extension of said bracket arm provided at its outer end with engaging means whereby a hooked rod may be employed to swing the column towards or from the tender, substantially as described.

Nicholas Paul Fenner, Jr.

Witnesses: Edward Peck, Edward Sussdorf.

[fol. 57] (Paper No. 1, Rejection April 11, 1904)

This application has been examined.

Claims 1 and 4 are rejected as involving only a functional distinction over the patent to Poage, #648,346, April 24, 1900, Water Distribution, Tanks. Such a loop as is shown in Poage may be placed at any convenient place without invention. The work "roller" or some equivalent expression should be substituted for "a track or way" in line 7 of claim 3, and then the claim may be allowed.

Claim 2 may be allowed.

F. M. Tryon, Ex.

Dimick.

(Paper No. 2, Amendment April 28, 1904)

Replying to office letter of April 11th inst., I herewith amend my above application as follows:

In claim 1, line 6, "telescopicaally" should be "telescopically" and after the same word insert "and non-pivotally".

This claim is not met in terms or substance by the Poage patent, for in the Poage construction the pipe is hinged or pivoted at F to the column and can have no telescopic movement in or out, but can only swing up and down on said pivot, whereas in my construction, the discharge pipe can be not only swung up and down, but can be moved in or out to a considerable distance to meet the requirement of the position of the man-hole in the tender. With the Poage column the man-hole has to be exactly opposite the column in a line at right angles to the track, whereas with my construction the man-hole might be a foot or two out of such line in either direction. With the Poage column the train would have to be backed and started forward may- two or three times before the exact adjustment would occur, occasioning not only loss of time but discomfort to the passengers; and in the case of a freight train a straining of the couplings.

With regard to claim 3, line 7, "track or way" is correct and refers to the parts lettered M in Fig. 1, M′ in Fig. 2; and M_2 in Fig. 4. The roller is properly included in the claim and travels on this track or way. This will be ap-

parent to the Examiner upon rereading the claim. √In claim 4, lines 5 and 6 after "telescopically" insert "and non-pivotally". This claim is drawn to a legitimate combination of elements and for the reasons given as to claim 1 is not met in terms or substance by Poage.

[fol. 58] On the foregoing amendment, and for the reasons given, I would beg a reconsideration and allowance of the case.

Very respectfully, Nicholas Paul Fenner, Jr., by Chas. M. Peck, His Atty.

(Paper No. 3, Rejection, May 19, 1904)

This application has been considered as amended April 28, 1904.

The position of the Examiner is thought to be correct in objecting to claim 3, for as the claim now reads the "track or way" is said to engage "said track or way." See lines 7 and 8. Otherwise the claim is indirect as to the "roller." When this has been corrected the claim may be allowed.

Claims 1 and 4 may be allowed.

F. M. Tryon, Ex.

Dimick.

Haskill, Actg. Exr.

(Paper No. 4, Amendment "A" May 23, 1904)

Replying to office letter of May 19th, inst., I herewith amend my above application as follows:

√My office copy of claim 3 reads:

A. "3. In a water column of the character described, the combination of a stand pipe, an extended discharge nozzle secured at the head thereof, a bracket arm likewise secured to the head of the column and extending therefrom above the discharge nozzle, a discharge pipe whose inner ends is united loosely and telescopically to said discharge nozzle so as to be moved freely thereon, a track or way secured to and pendent from said bracket arm, and a guide roller secured to the inner end of the discharge pipe and engaging track or way, said roller serving to support

the pipe and guide in its movements, substantially as described."

If the office copy of claim 3 differs from the above claim please erase it and substitute the above claim.

From what the examiner says I imagine that a line has been entirely left out of the original claim and hence the inability on my part to understand the Examiner's objection from the reading of the office copy.

[fol. 59] This amendment, it is believed, will make everything straight and a reexamination and allowance of the case is requested.

Very respectfully, Nicholas Paul Fenner Jr., by Chas. M. Peck, His Atty.

(Paper No. 5, Letter May 31, 1904, from Patent Office)

This application has been considered as amended April 23, 1904.

The claims may be allowed. New claim 3 is entered in place of old claim 3 to fulfill the requirements of the Office.

In view of an interference in fact, under Rule 96 the following claim is suggested to applicant which should be entered by amendment within thirty days from the date hereof, said time expiring on June 30, 1904, if he desires to avail himself of his rights in this interference:

In a water column of the character described, the combination of a revoluble stand pipe, an extended discharge nozzle secured at the head thereof, a discharge pipe whose inner end is united loosely and telescopically with said discharge nozzle so as to be moved freely thereon, a pivoted link connection uniting said discharge pipe near its inner end with the stand pipe of the water column, and means for counterbalancing the discharge pipe, whereby said discharge pipe may be raised or lowered always in a vertical plane, no matter at what angle it may occupy to the track substantially as described.

A copy of this letter is mailed to applicant in person, under Rule 97, since the attorney of record is the same in this and one of the interfering cases.

F. M. Tryon, Ex.

Dimick.

(Paper No. 6, Letter to Office June 30, 1904)

Replying to Office letter of the 31st ult., I would say that I have carefully examined the application of Mr. Frank M. Foster, Serial No. 190,313, filed Jan. 23rd, 1904, which application, together with this one, is to be owned and controlled by the American Valve & Meter Company, of which I am President and General Manager, and of which Mr. Foster is Secretary and Treasurer, and I cannot see that there is any interference in fact between my above application and that of Mr. Foster mentioned.

[fol. 60] The claim suggested for me to put into my application is taken from Mr. Foster's case and could not be read on my construction. For instance, I have no "pivoted link connection uniting said discharge pipe near its inner end with the stand pipe of the water column," and I think it would simply be a waste of time to follow the Examiner's suggestion and have an interference declared, for there would simply be a concession of priority on my part for the new claim in my case to Mr. Foster, and a concession of priority by Mr. Foster on the new claim to me, and the matter would stand exactly as it does now; but aside from this matter of inexpediency I do not consider, as above pointed out, that there is any interference in fact, and would beg an allowance of my case as it stands.

Very respectfully, Nicholas Paul Fenner, Jr., by Chas. M. Peck, His Atty.

Cincinnati June 28, 1904.

[fol. 61] DEFENDANT'S EXHIBIT No. 5

File Wrapper and Contents, Johnson vs. Foster Interference

Interference No. 23,974

JOHNSON

v.

FOSTER

Subject Matter, Water Columns

Attorneys, Henry W. Carter for Edward E. Johnson; Charles M. Peck for Frank M. Foster.

Application Serial No. 195,923 of Johnson, and Serial No. 190,313 of Foster. Declaration of Interference August 9, 1904.

The issue is Claim 51 of Johnson and Claim 1 of Foster, as follows:

"In a water column of the character described, the combination of a revoluble stand pipe, and extended discharge nozzle secured at the head thereof, a discharge pipe whose inner end is united loosely and telescopically with said discharge nozzle so as to be moved freely thereon, a pivoted link connection uniting said discharge pipe near its inner end with the stand pipe of the water column, and means for counterbalancing the discharge pipe, whereby said discharge pipe may be raised or lowered always in a vertical plane, no matter at what angle it may occupy to the track, substantially as described."

Contents:

Preliminary statement of Edward E. Johnson.
Preliminary statement of Frank M. Foster.
Motion to dissolve by Edward E. Johnson.
Examiner's decision on motion to dissolve.

(Preliminary statement of Edward E. Johnson)

STATE OF MINNESOTA,
County of Ramsey, ss:

>Edward E. Johnson, being duly sworn, deposes and says that he is the Edward E. Johnson whose above entitled application has been placed in interference with an application filed by Frank M. Foster, of Cincinnati, Ohio; that he conceived of the invention set forth in the declaration of interference about the beginning of the year 1900; that he made a sketch thereof at that time; and that he disclosed the invention to others about the beginning of the year 1901; [fol. 62] that he made no model as such, but reduced the invention to practice by the construction of a full sized working device which was completed and placed in operation during the early part of the year 1903, and that a number of other water columns embodying the invention have since been made and placed in operation.

Edward E. Johnson.

Subscribed and sworn to before me, at St. Paul, Minn., this 31st day of August, A. D. 1904. C. C. Jones, Notary Public, Ramsey County, Minnesota. (Seal.)

(Preliminary Statement of Frank M. Foster)

STATE OF OHIO,
County of Hamilton, ss:

Frank M. Foster, being duly sworn, deposes and says that he is the applicant for letters patent of the United States for Water Columns, filed January 23rd, 1904, Serial No. 190,313, which, on August 30th, 1904 was declared by the Hon. Commissioner of Patents to be in interference in the particulars or "issue" therein set forth with the application for Railway Water Columns, filed by Edward E. Johnson, of St. Paul, Minnesota, care Charles A. Stickney Co.

That affiant first conceived the invention set forth in the issue above referred to on or about August 1st, 1900; that he never made a model of a water column embodying his invention, but first made a sketch of a column embodying the said invention and explained it to others on or about August 6th, 1900; that on the same date he made another sketch embodying the same invention in a modified form and at the same time showed and explained the same to others; that on or about November 7th, 1903 he first caused a working drawing of a water column embodying his invention to be made; that the first full sized working water column was completed in the shops of affiant's assignee, the American Valve and Meter Company during the month of November, 1903, and as affiant remembers, it was before the middle of said month, and immediately after the same column was put in use experimentally at the factory of the said American Valve and Meter Company, and the same worked successfully; that since that time, and as early as April, 1904, affiant's assignee shipped columns embodying the aforesaid [fol. 63] invention to various railroads and have since made and sold the same extensively.

Frank M. Foster.

Sworn to and subscribed before me this 3rd day of September, 1904. Edward Peck, Notary Public in and for Hamilton County, Ohio. (Seal.)

(Motion to dissolve by Edward E. Johnson)

Hon. Commissioner of Patents,
Washington, D. C.

SIR:

And now comes Edward E. Johnson, by his attorney, and moves that the above entitled interference be dissolved >
on the following grounds:

First. That there is no interference in fact.

Second. That there has been such irregularity in declaring the interference as will preclude a proper determination of the question of priority of invention.

Third. That the subject matter of the interference is not patentable to the party Foster.

Fourth. That the party Foster has no right to make the claim in any sense which would conflict with the invention of the party Johnson.

It is also moved that the records of this interference and the foregoing motion to dissolve be transmitted to the Primary Examiner for hearing and determination on the merits thereof.

It is further moved that all proceedings in this interference be suspended pending final determination of the motion to dissolve.

Very respectively,
Henry W. Carter, Attorney for Johnson.

(Examiner's Decision on Motion to Dissolve)

It is found that the issue in this interference defines the invention in controversy in part as follows:—"a pivoted link connection uniting said discharge pipe near its inner end with the stand pipe of the water column." If the expression "pivoted link" is construed to mean an arm on the [fols.64 & 65] discharge pipe which is pivoted at its outer end to the column the issue is met in Poage. If, on the other hand, the expression is construed, as apparently it should be, to mean a link pivoted at one end to the water column

and at the other end to the discharge pipe, the subject matter of the issue is not shown by Johnson. The question whether or not the claim is patentable to Foster becomes upon that construction an ex parte question.

It is therefore decided that the interference be dissolved. Appeal may be taken at any time within ten days from the date hereof.

F. M. Tryon, Ex.

Defendants' Exhibit No. 23,
Pencil Sketch of Plaintiffs' Hayfield Standpipe
Showing Dimensions.

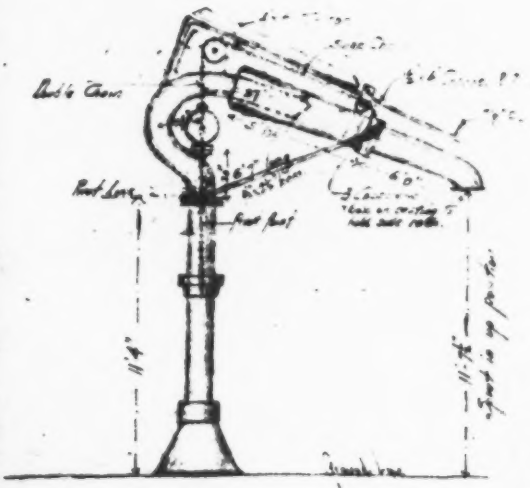

Introduction to Catalogue of 1900.

****

POAGE'S IMPROVED AUTOMATIC WATER COLUMN "1895-98."

The "1895-98" Water Columns, as made for the last five or six years, operate so perfectly under all conditions, that they have given satisfaction in every case. In 1898 the water-ways to and from the valve were enlarged, giving them a capacity much greater than that of the pipe. The convenience of getting at the valves adds much to their value. Their durability is such that the repairs have been reduced to a minimum. For its claims see page 57.

The "1895-98" Water Column will be shipped on all orders that do not specify the special kind.

POAGE'S AUTOMATIC WATER COLUMN "STANDARD"

Was manufactured exclusively from 1883 to 1895, and had established such a high reputation that quite a number of railroads continue to use it in preference to changing to the later improved machines, and for that reason I continue to represent it in this catalogue and furnish it when specially ordered. See pages 63 and 64.

ADJUSTABLE SPOUT FOR POAGE'S WATER COLUMN.

On account of the varying heights of locomotives there has been difficulty in conducting the water into the tender, and various devices have been tried for that purpose. On the following pages I present a device that successfully accomplishes this purpose. It has been tried and adopted by some of our leading roads. I can furnish either the Improved "1895-98" Water Column or the "Standard" Water Column with this Adjustable Spout when so ordered.

JOHN N. POAGE.

F. H. FOSTER, Sec'y.
C. UMSTETTER, Supt.
J. C. SIMMS, Asst. Supt.

June, 1900.

Court and Harriet Streets,
CINCINNATI, OHIO.

CHARACTERISTICS.

1st. **Its simplicity.** It has but two motions; 1st, the rotation of the column; 2d, the rising and falling of the rod. The two valves move positively with the rod and the piston.

2d. **One person operates it** without assistance, as the spout is within reach of the fireman, and the valve is operated by a lever over the spout at his hand.

3d. **After being used it swings back** to its place by its weight, and remains safe from accident by passing trains.

4th. **No ice can form around the rod.** The rod operating the valve is surrounded by a one-inch pipe, the lower end of which is drained through the side of the column in the pit, preventing the rod from becoming wet and freezing.

5th. **No ice in the pipe.** A large waste-valve so quickly draws off the water from the vertical pipe that no ice will form in the pipe. In the summertime the waste-valve is set so as not to waste. The two features, 4th and 5th, make the machine absolutely safe from ice.

6th. **The main valve is cylindrical, and balanced,** and is easily operated. It has greater strength and durability than any other form of valve.

7th. **The closing of the valve is regulated** by a cylinder, piston, and vent, which prevents concussion in the pipes. **This important feature has been greatly improved, and is reliable.**

8th. **Reliability of working parts.** The reseating of the main valve, the opening of the waste-valve, and all other automatic movements are retained by gravity alone.

9th. **Spout made adjustable.** When the improvement of 1900 is added, the spout is adjustable to different heights of locomotives.

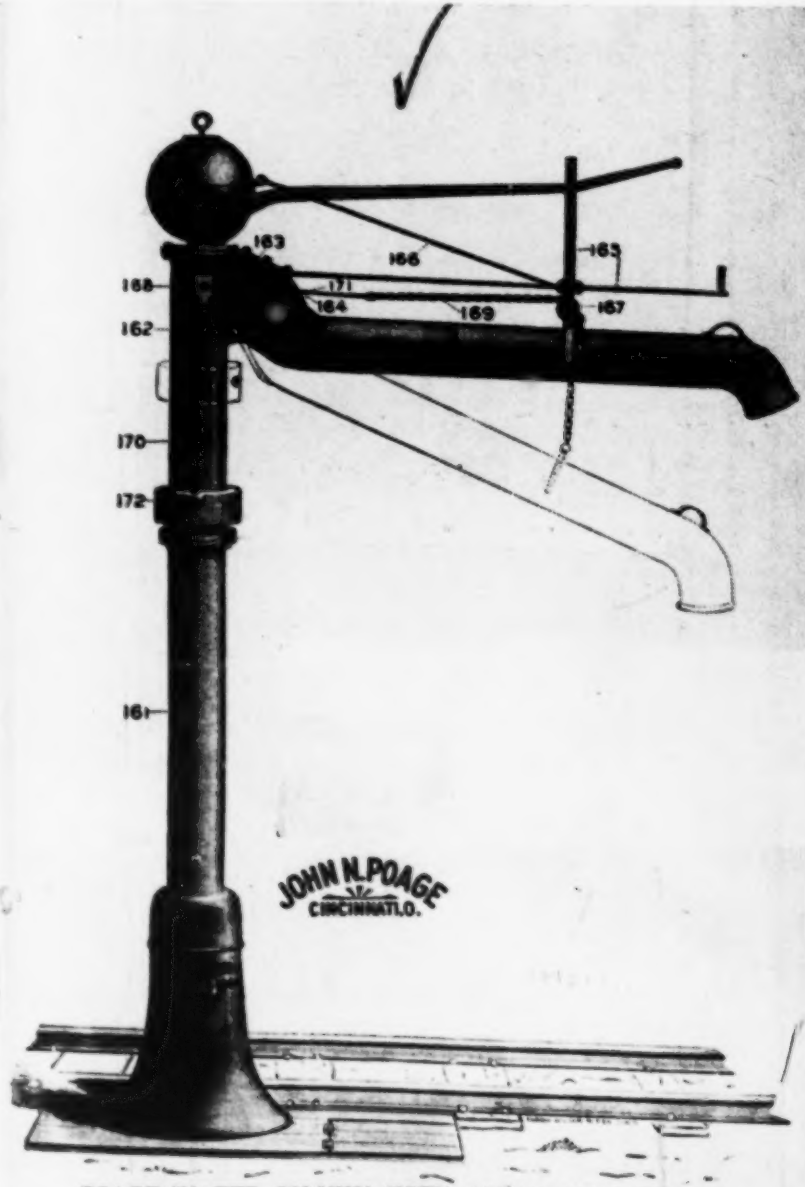

POAGE WATER COLUMN, WITH ADJUSTABLE SPOUT.

FOR PRICE LIST SEE OPPOSITE PAGE.

This device was first tested and used by the B. & O. S-W. Ry. It proved so satisfactory that I am able to refer to D. D. Carothers, Eng. M. of W., Cincinnati, O., or other officials of that company.

The Adjustable Spout 1900 for Poage's Water Columns.

DIRECTIONS FOR SETTING UP, SEE PAGE 89.

The cut on the opposite page illustrates an improvement, which I believe adds very much to the usefulness and convenience of the water column. There is no change made in the water column except in relation to the movement of the spout. The parts that are below the flange of the pipe 161 are unchanged.

The spout is hinged to the column at the rear end, and supported by a chain toward the front, which, in connection with the weight No. 172, brings the spout up to its position after being used. The joint is so constructed that the water is impelled forward by its momentum and gravity, and prevents the tendency to escape through the joint.

There is an annular opening between the parts forming the joint, preventing any contact between them, thus draining the joint forward so as to prevent the accumulation of ice. When the spout is drawn round in position to take water it is depressed until its end enters the well hole, and the water flows without waste directly into the tender. These parts are so constructed as to be as durable as the other parts of the water column, and not liable to get out of order.

The water column is operated by the fireman alone; he draws it round by the bar No. 165 to take the water, depresses the spout, pulls down the lever, takes water, and releases it without delay or assistance.

On account of the fluctuation of values this list is made subject to change at any time.

PRICE LIST.

Improved Automatic Water Columns "1895-98," with Adjustable Spouts.

Price for	12-in.	F. O. B.	Cincinnati	$363 00
"	10-in.	"	"	263 00
"	8-in.	"	"	226 00
"	6-in.	"	"	208 00

Old Style "Standard" Water Columns, with Adjustable Spout.

Price for	10-in.	F. O. B.	Cincinnati	$242 00
"	8-in.	"	"	215 00
"	6-in.	"	"	198 00

Discount, . . . per cent.

For extra length vertical pipe or spout, additional charge will be made.

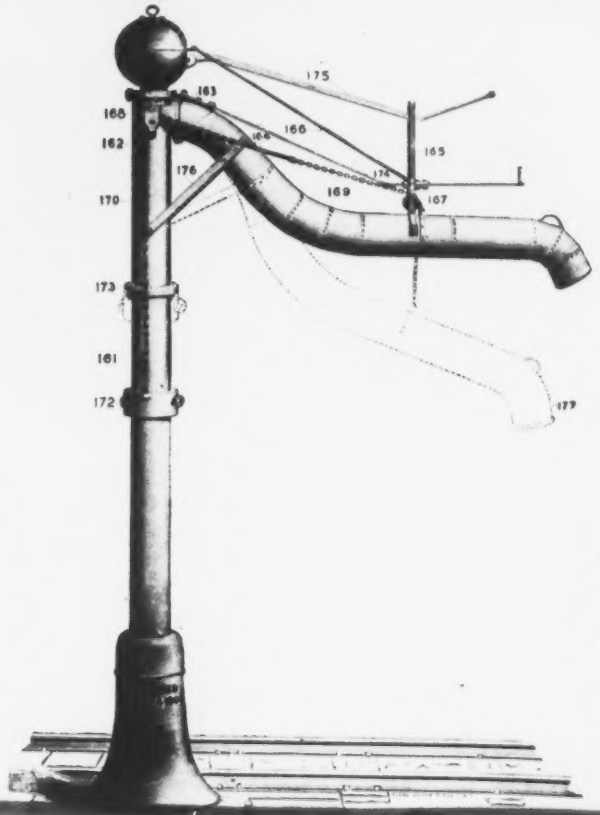

Poage's "Style C"

Automatic Water Column

Made in 6, 8, 10 and 12 inch

DESCRIPTION

The mechanism of Poage's "Style C" is identical with that of "Style B" as shown and described on pages 4, 5 and 6 of this catalogue, excepting the spout, which has a vertical adjustment of three feet.

Please note: the adjustable feature is made *entirely of metal;* there being no rubber to crack and break in cold weather or melt in hot weather, there is nothing about it to wear out.

There is an annular passage between the parts forming the telescopic joint, without any contact between them.

This is a one-man column, operated by the fireman alone; he draws it around in position to take water, depresses the spout until its end enters the man-hole, pulls down the lever, which is held so by a stationary pin in lever guide; when tender is filled he releases lever and spout, which immediately returns to its position parallel to track without assistance, in the same manner as the rigid spout described on page 4.

Full instructions for setting up will be found on page 9 of this catalogue

PRICES ON APPLICATION.

DEFENDANTS' EXHIBIT 26, AMERICAN VALVE & METER CO. 1906 CATALOG (PP. 22-23).

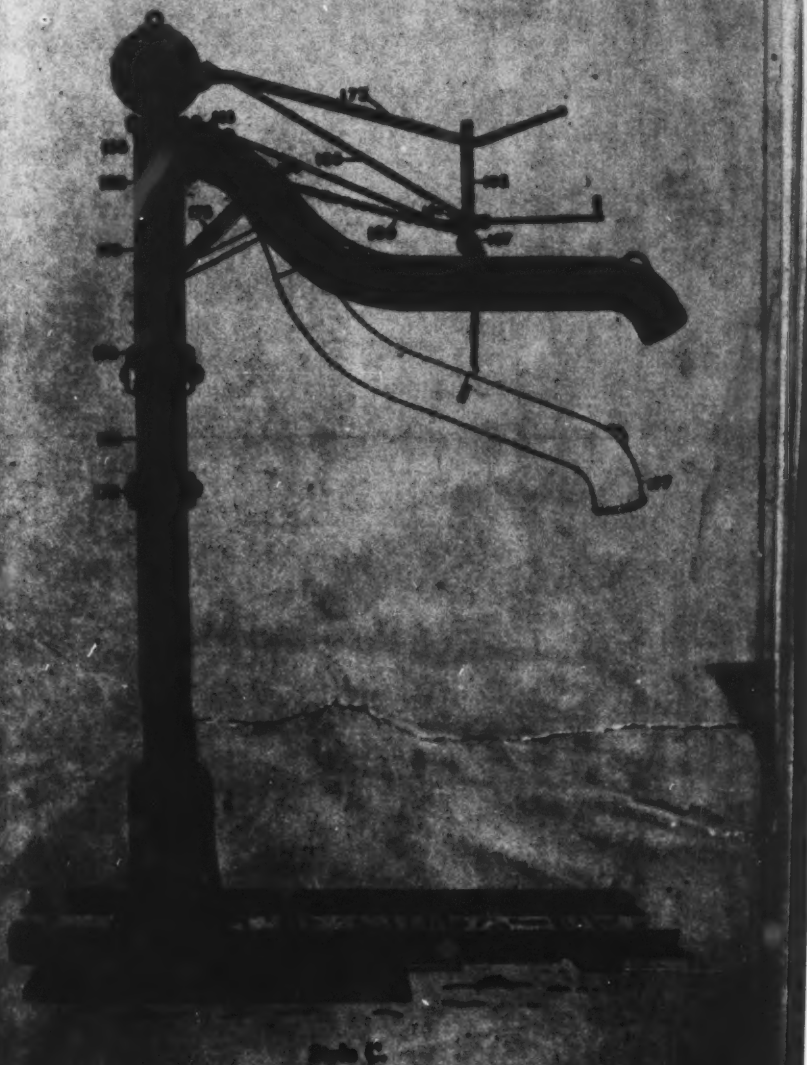

V

Style C.

The Poage Style "C" Water Column has a spout with a vertical adjustment of ree feet and the parts are made entirely of metal. The spout has a telescope int with an open annular space between the parts and has no packing.

The parts below top of vertical column are the same as in Style "B" and the lumn is operated by one man from the tender.

Where an adjustable spout is wanted we recommend our later type (Style D"), as described on page 17.

Shipping Weights of Style C.

6-inch	2,500 pounds.
8-inch	2,600 pounds.
10-inch	3,400 pounds.
12-inch	4,500 pounds.

Style "D" Tops can be furnished to fit Style "C" Columns, now in service, cut and description on page 20.

J. D. CRAIG.

Railway Water-Tank.

No. 220,580. Patented Oct. 14, 1879.

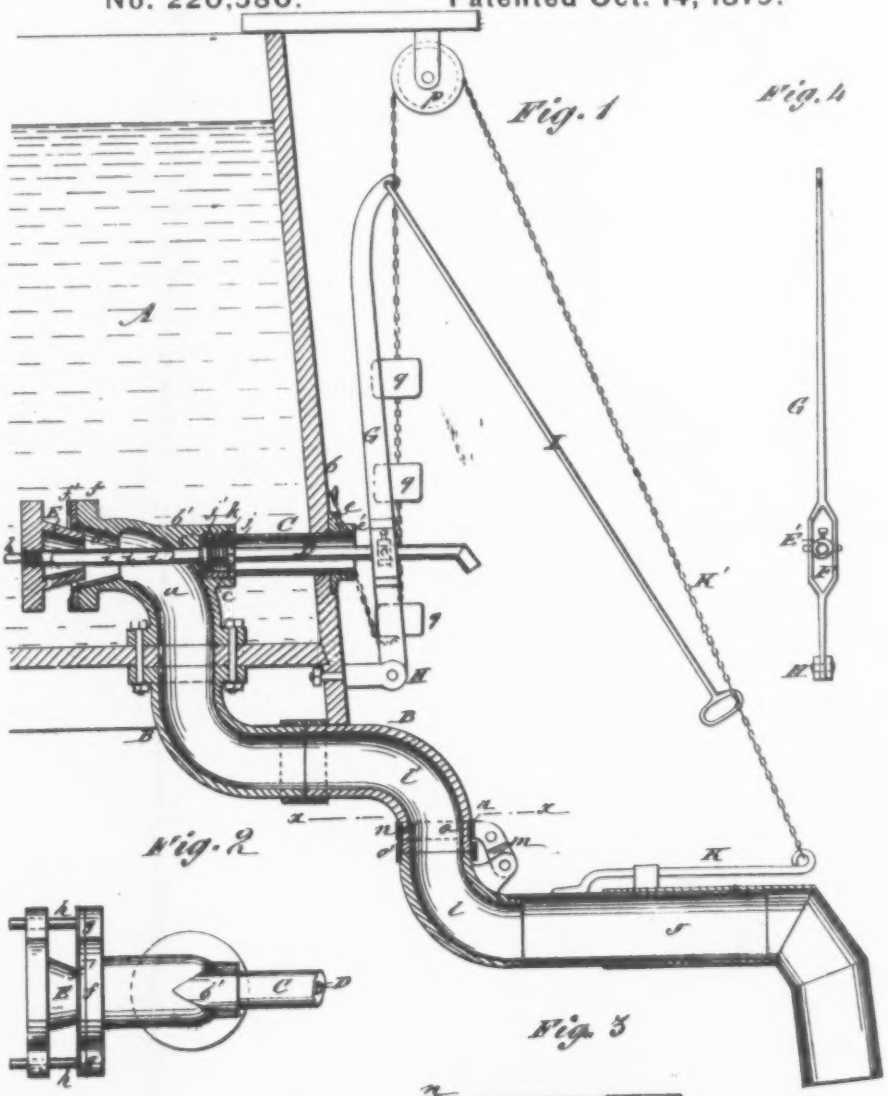

78

UNITED STATES PATENT OFFICE.

JOHN D. CRAIG, OF VIENNA, ILLINOIS.

IMPROVEMENT IN RAILWAY WATER-TANKS.

Specification forming part of Letters Patent No. **220,580**, dated October 14, 1879; application filed March 5, 1879.

To all whom it may concern:

Be it known that I, JOHN D. CRAIG, of Vienna, in the county of Johnson and State of Illinois, have invented a new and Improved Railway Water-Tank, of which the following is a specification.

This invention relates particularly to the arrangement of the valve-seat and valve-stem within the feed or outlet pipe, to the manner of operating the same, and to the construction of the feed or outlet pipe.

The objects of the improvements are to prevent the freezing of the water in the tank from affecting the valve-stem and valve, and causing leakage and the consequent freezing and choking of the outlet-pipe; to prevent the bouncing and dancing of the valve when closed by the formation of a vacuum when the water is shut off; to adapt the outlet-pipe to the admission of the valve stem, and to provide a hinged coupling for the extension of the outlet-pipe.

The invention will be first described in connection with the drawings forming part thereof, and then specifically pointed out in the claims.

In the accompanying drawings, Figure 1 is a vertical section of a railway water-tank, outlet-pipe, valve and valve-seat, and tube incasing the valve-stem. Fig. 2 is a top view or plan of the valve, the upper end of outlet-pipe containing the valve-seat, stem, and the valve-stem casing. Fig. 3 is a section of the outlet-pipe on line *x x*, showing the hinged coupling; and Fig. 4 is a detail of the lever for operating the valve.

Similar letters of reference indicate corresponding parts.

Referring to the drawings, A represents a railway water-tank. B is a goose neck outlet or feed pipe, passed up through the bottom of the tank and opening toward the center in a horizontal line, while the lower end is extended outward in several bends toward the railway-tracks, but terminates short thereof, so as to avoid passing trains. The elbowed portion *a* of the pipe B, within the tank, has on the outside of the bend, next the side *b*, a projection, *b'*, in which is a threaded socket, *c*, from the bottom whereof a hole, *c'*, extends into the pipe, said socket and hole being concentric to the conical valve-seat *d*.

C represents a tube, which is passed through the side *b* of the tank, and screwed into the socket *c*, while over its end, projecting through side *b*, is passed a gasket, *e*, to make a water-tight joint between the tube and tank, and a nut, *e'*, to secure the gasket in place.

Through tube C is passed the hollow valve-stem D, thence through hole *c'* and the upper part of the elbow *a*, projecting through the open end of the pipe and attached to the center of the conical flanged valve E. The tube C protects the valve-stem from the effects of the freezing of the water in the tank.

Valve E fits closely in the valve-seat *d*, and on the face of the flange *f*, surrounding this seat, is a metal plate, *f'*. From lugs *g g*, on opposite edges of this flange, rods *h h* project and pass through corresponding portions on the flanged head of valve E. These rods, together with the valve-stem, guide the valve in closing and opening, so that it will seat itself perfectly.

The valve-stem is hollow, closed at the valve end, and open at the end projecting outside the tank. Inside the elbow *a* the valve-stem is provided with perforations *i*. The purpose of the hollow valve-stem and the perforations is to admit air to the elbow *a* after the valve is closed, and thus enable the water to run out easily, to avoid the formation of a vacuum at the upper end of the pipe, the consequent violent agitation at this point, and the dancing and bouncing of the valve, which tends to loosen it in its seat and cause leakage.

At the inner end of tube C the valve-stem is provided with two collars, *j j'*, with rubber gaskets around them to pack the joints. The former is fixed to valve-stem, while the latter is movable, and a spiral spring, *k*, wrapped around the stem between the collars, bears against collar *j'*, and keeps it pressed against the bottom of the socket, and thus prevents leakage.

The valve-stem is confined in the collar E', pivoted in the yoke F of lever G, which is fulcrumed at H, and to its upper end is attached one end of a rod, I, which hangs down, and by means of which the lever is operated, and,

moving the valve-stem, the valve is opened and closed at will.

J is the extension-pipe, that hangs over the tender when the tank therein is being supplied. It is attached to the end of elbow *l*, which in turn is connected with elbow *l'* by a hinge, *m*, the upper part whereof is attached to a collar, *n*, set into a rabbet, *o*, on the end of elbow *l'*, so as to turn freely, while the joint between the ends of the two elbows is closed by a socket ring or sleeve, *o'*, fixed to the end of elbow *l'*, so that the end of elbow *l* can be attached and detached at pleasure.

On the top of the straight part of section J is a rod, K, at the end whereof is attached one end of a chain, K', which is passed up and over a pulley, *p*, and to the pendent end are attached weights *q*. The purpose of this is to balance the extension, and thus enable it to be swung around easily. The hinge *m* permits the end of elbow *l* to be lowered, to disconnect from the end of elbow *l'*, while the ring or collar *n*, to which the hinge is connected, permits the extension to be swung around after the tender-tank is filled and the water stopped.

From the above description it will readily be seen that the freezing cannot affect the valve or valve-stem; hence the valve will retain its close connection with its seat, and leakage is entirely prevented.

Having thus described my invention, I claim as new and desire to secure by Letters Patent—

1. The goose-neck pipe B, passed up through the bottom of the tank A, and provided with the projection *b'* on the elbow *a*, having a socket, *c'*, in combination with the tube C, the valve-stem D, and the tank A, substantially as and for the purpose described.

2. The hollow valve-stem D, provided with perforations *i*, and passed through the side of the tank and through the upper part of the elbow *a*, in combination with conical valve E and elbow *a* of the goose-neck pipe B, whereby air is admitted to the upper part of the elbow *a*, when the valve is closed, a vacuum prevented, and the water allowed to run out easily without disturbing the valve E, substantially as described.

3. In combination with the valve-stem D, the tube C, extending through the side *b* to the socket *c*, and inclosing the valve-stem to protect it against the effects of the freezing of the water in the tank, substantially as described.

4. The fixed collar *j* and loose collar *j'*, with intervening spring *k*, in combination with tube C and stem D, to pack the valve-stem and prevent leakage, substantially as described.

5. The elbows *l l'*, connected together by a hinge, *m*, the upper part whereof is attached to collar or ring *n* in rabbet *o* of elbow *l'*, in combination with extension J, whereby the elbow *l* and extension can be moved at will, substantially as described.

JOHN D. CRAIG.

Witnesses:
F. M. SIMPSON,
N. J. BENSON.

(No Model.)

H. ARMINGTON.

GRAIN ELEVATOR.

No. 259,457. Patented June 13, 1882.

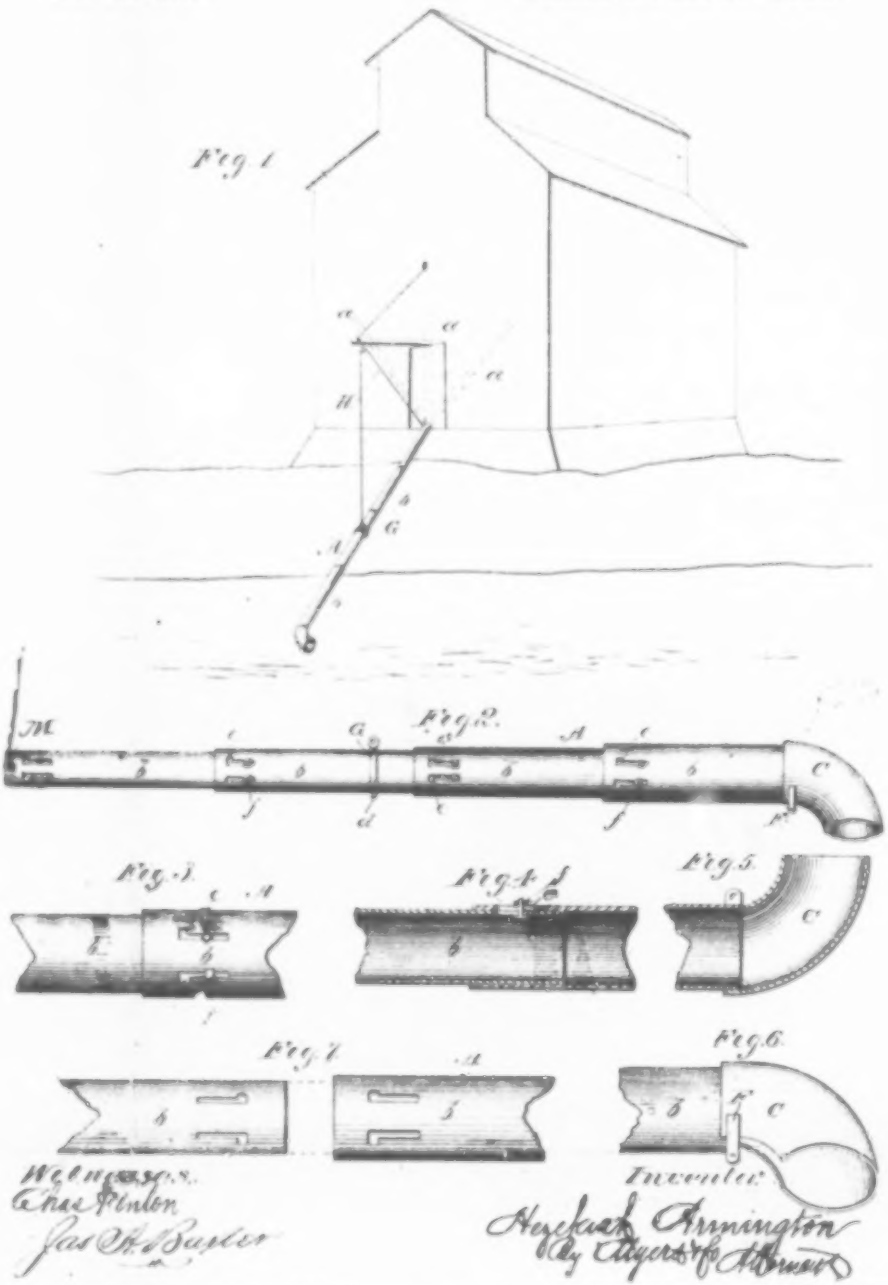

Witnesses:
Chas. Pinton
Jas. H. Baxter

Inventor:
Hezekiah Armington
by Edgerton & Edgerton
Attorneys

51

UNITED STATES PATENT OFFICE.

HEZEKIAH ARMINGTON, OF ATLANTA, ILLINOIS.

GRAIN-ELEVATOR.

SPECIFICATION forming part of Letters Patent No. 259,457, dated June 13, 1882.

Application filed April 20, 1882. (No model.)

To all whom it may concern:

Be it known that I, H. ARMINGTON, a citizen of the United States, residing at Atlanta, in the county of Logan and State of Illinois, have invented certain new and useful Improvements in Grain Elevators, of which the following is a specification, reference being had therein to the accompanying drawings.

My invention relates to an improvement in grain-elevators; and it consists in such construction of the elevator-spout as admits it being readily adjusted and adapted to varying altitudes and positions to suit the place of receiving and depositing the grain.

In the drawings, Figure 1 is a view in perspective, showing the entire machine. Fig. 2 is a longitudinal section, and Figs. 3, 4, 5, 6, and 7 are detail views, thereof.

A represents a spout formed in sections *b b*, having the branch spouts *a a a*, which connect therewith. The sections of the spout are constructed and arranged to telescope together.

The sections are respectively also provided with the right angular slots *c c*, which, in connection with the bolts *f f*, are employed for shortening the length of the spout. The spout is shortened by telescoping the joints, which are dissimilar in diameter, as shown, whereupon the head of the bolt is passed through two or more sections of the pipe, the head of each bolt being passed through the enlarged part of the slot at *c*, and its shank into the narrow slot *c'* adapted as to size for its reception, and it is then secured by nuts, as shown in Fig. 4. By this means the spout may be lengthened or contracted as the tide in loading boats and the distance in loading cars on low or high side tracks may require.

C, in Figs. 2, 5, and 6, designates an elbow of the spout, which is connected by a swivel-joint to band F, the band being secured by a bolt which admits the elbow to be shifted, in order that the grain may be directed in any required direction from the spout. The elbow is also open on the inner curve to permit it to be spread or contracted to any desired position. The rope and pulley H are attached to the spout by the band G. Band G is secured by a bolt and nut, and it is composed of two equal parts hinged at *d*, which permits it being readily adjusted to any part of the spout.

The rope and pulley H are designed for adjusting the spout to any required position and holding it in such position, and for withdrawing it from outside the building when unused.

The ring M has a rope attached thereto, and this is employed for retaining the spout in position, and for withdrawing it from outside the building when desirable, as shown in Fig. 8.

Having thus described my invention, what I claim, and desire to secure by Letters Patent, is—

1. The combination of sections having right-angular slots *c* and bolts *f*, substantially as shown, and for the purpose described.

2. The combination of the sections, bolts *f*, and swivel-jointed elbow C, substantially as shown, and for the purpose described.

3. The combination of the swivel-jointed elbow C, band G, and sections, substantially as shown, and for the purpose described.

4. The combination of the sections *b b*, band G, and ring M, substantially as shown, and for the purpose described.

In testimony whereof I affix my signature in presence of two witnesses.

HEZEKIAH ARMINGTON.

Witnesses:

EDMUND HILL,

I. I. WILLIAMS.

82

(No Model.) 3 Sheets—Sheet 1.

H. F. PROBERT.

STAND PIPE FOR SUPPLYING WATER TO RAILROAD ENGINES.

No. 420,889. Patented Feb. 4, 1890.

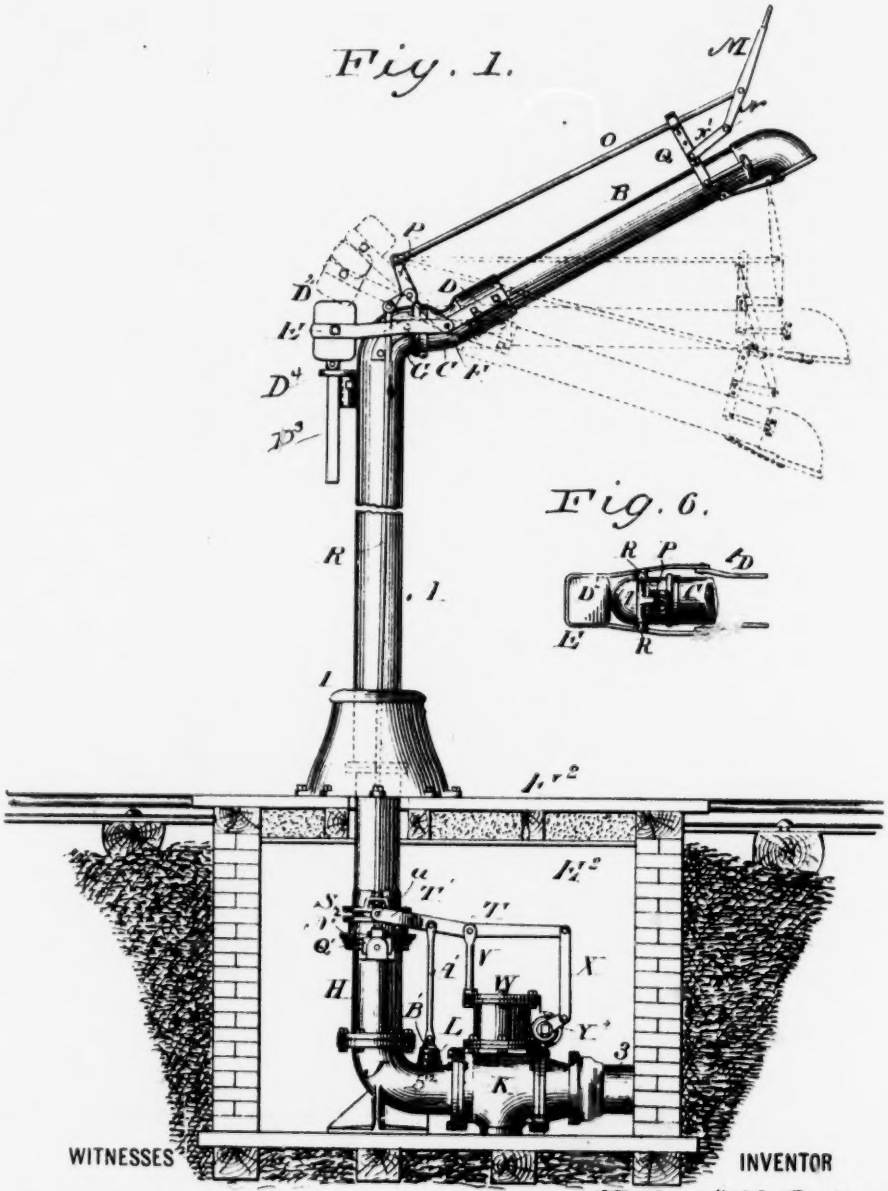

WITNESSES INVENTOR

Al. C. Newman
E. S. Newman

By his Attorneys Hubert F. Probert.
Marcus S. Hopkins.
Joseph R. Atkins

(No Model.) 3 Sheets—Sheet 2.

H. F. PROBERT

STAND PIPE FOR SUPPLYING WATER TO RAILROAD ENGINES.

No. 420,889. Patented Feb. 4, 1890.

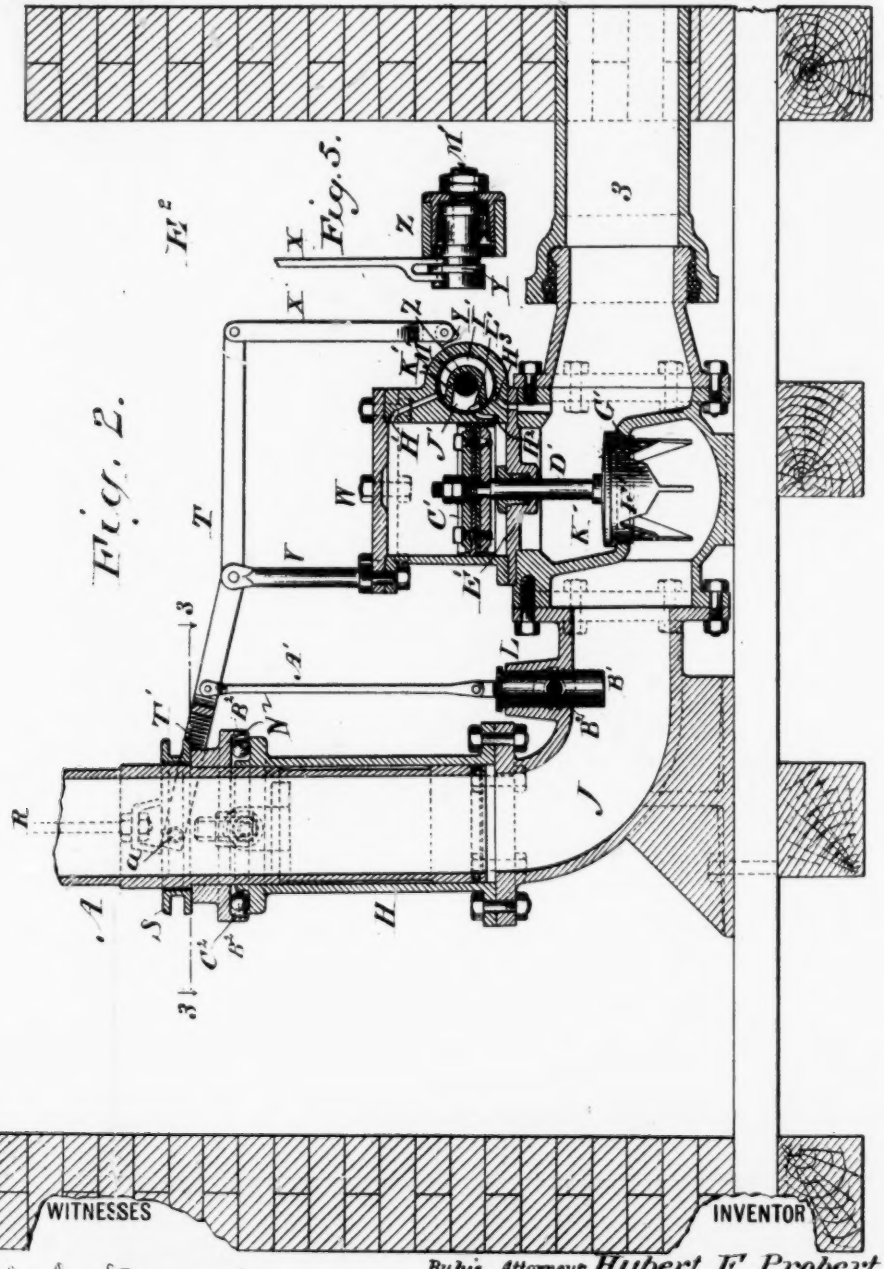

H. C. Newman.
C. D. Newman.

By his Attorneys Hubert F. Probert.
Marcus D. Hopkins
Joseph Watkins

(No Model.) 3 Sheets—Sheet 3.

H. F. PROBERT.

STAND PIPE FOR SUPPLYING WATER TO RAILROAD ENGINES.

No. 420,889. Patented Feb. 4, 1890.

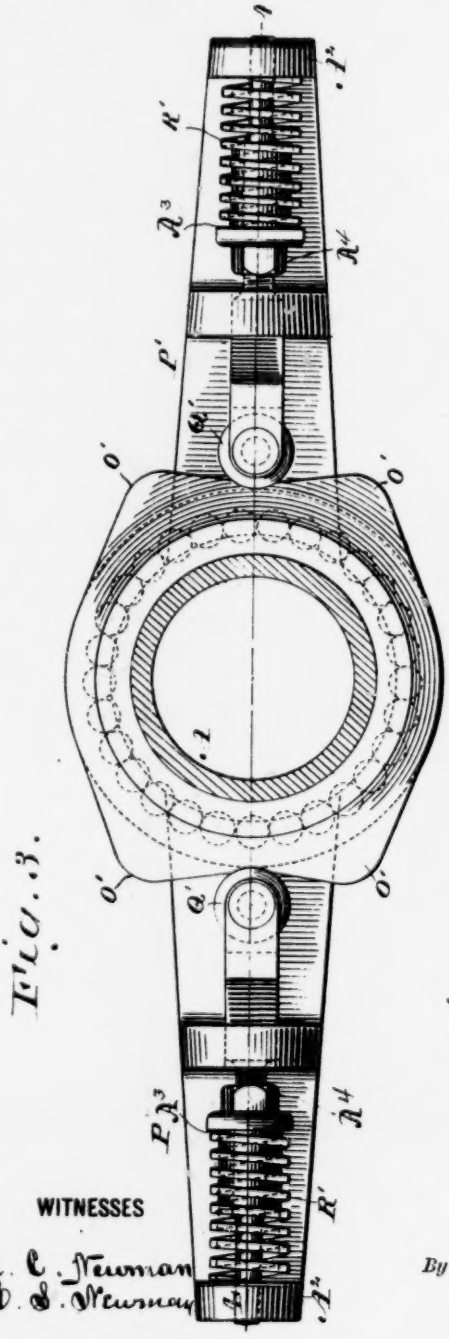

Fig. 3.

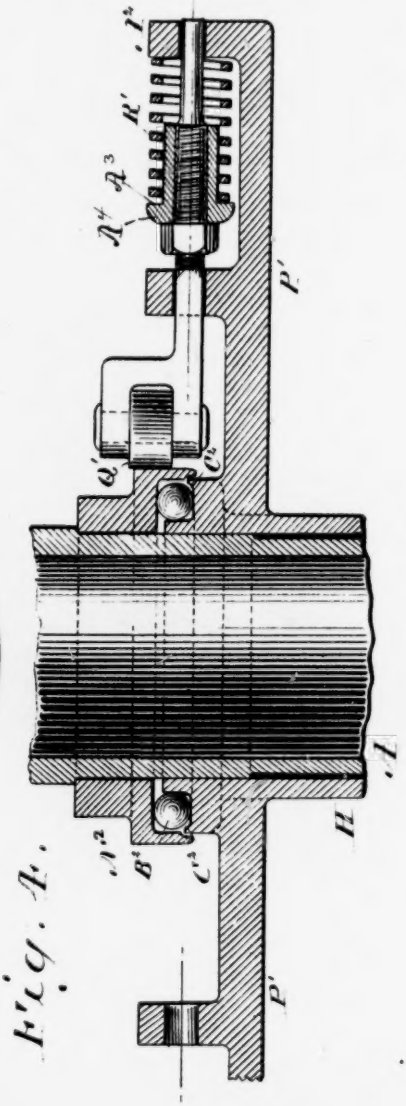

Fig. 4.

WITNESSES

H. C. Newman
O. S. Newman

INVENTOR

Hubert F. Probert.

By his Attorneys

Marcus S. Hopkins.
Joseph Hopkins

UNITED STATES PATENT OFFICE.

HUBERT F. PROBERT, OF THREE RIVERS, MICHIGAN, ASSIGNOR OF ONE-HALF TO THE SHEFFIELD VELOCIPEDE CAR COMPANY, OF SAME PLACE.

STAND-PIPE FOR SUPPLYING WATER TO RAILROAD-ENGINES.

SPECIFICATION forming part of Letters Patent No. 420,889, dated February 4, 1890.

Application filed November 12, 1888. Serial No. 290,580. (No model.)

To all whom it may concern:

Be it known that I, HUBERT F. PROBERT, of Three Rivers, county of St. Joseph, and State of Michigan, have invented certain new and useful Improvements in Stand-Pipes for Supplying Water to Railroad-Engines, of which the following is a specification, reference being had to the accompanying drawings.

The object of my invention is to provide a device suitable for conveniently supplying water to engines in all seasons of the year with equal facility.

By my invention the water is kept underground and protected from cold, while at the same time it can always be delivered for use by an operator standing upon the engine-tender. I also provide improved means by which, when not in use, the spout may be swung out of the way, and yet remain convenient for use the next time occasion demands. I also provide against the possibility of the spout swinging around before the wind, so as to be out of reach of the man upon the engine, and by the same means a device for assisting the adjusting of the spout when required to be used.

My invention consists in such improvements as I hereinafter describe in detail, and succinctly specify in my claims.

In the accompanying drawings, Figure 1 is a side elevation of my improved apparatus as used in practice, part of it being shown as underground. Fig. 2 is a central vertical section of the underground portion of my apparatus. Fig. 3 is a horizontal section, partly in plan, on the line 3 3 of Fig. 2, drawn on a large scale. Fig. 4 is a vertical section taken on the line 4 4 of Fig. 3, but partly broken off at one end. Fig. 5 is a central vertical section, partly in elevation, of the auxiliary-valve mechanism. Fig. 6 is a side elevation of a part of the stand-pipe similar to that shown in Fig. 1, but broken away in front, in order to show in dotted lines the parts in the rear or on the opposite side.

Referring to the letters upon the drawings, A is a hollow column or stand-pipe.

B is a spout or continuation of the pipe.

C is a flexible connection between the two, which is preferably made of rubber that may be prepared by special process, so as to resist the action of any degree of cold.

D D are bars secured upon the spout B, and pivoted to the bifurcated lever E by pin F. The lever E is pivoted to the column A by the pin G, which acts as a fulcrum for the lever E.

D^2 is a counter-weight bolted to the lever E, and D^1 is a rod pivoted to the counter-weight and passing down through a guide D^4 secured to the pipe A. By this means the relations of the parts described are preserved through all the movements necessary for their operation.

H is a case, within which the column rests, and which, in connection with the curb I, serves to support it in an upright position.

J is an elbow connecting the case H and the valve-casting K, and is provided with a drain L.

M is a hand-lever having its fulcrum at the pivot N, and connected by the rod O with the bell-crank P.

Q is a standard resting on the spout B, which supports the pivoted fulcrum-link N′ and the rod O.

R R are rods connecting the bell-crank P and the grooved collar S, which is loosely fitted around the column A, so as to move upon it when actuated by the rods R R.

T is a lever, having two arms T′, which embrace the grooved collar S and are connected thereto by the lugs *a*, which work loosely within the groove of the collar.

V is a standard resting upon the pressure-cylinder W, attached to the valve-casting K and forming the fulcrum of the lever T.

X is a link pivotally connecting the lever T and the lever Y for operating the auxiliary valve Z.

A′ is a rod which pivotally connects the lever T and the drain-piston B′, that opens and closes the drain L in the usual way.

C′ is a piston working within the pressure-cylinder W.

D′ is a piston-rod connecting the piston with the main valve F′.

E′ is a separating-plate.

G′ is the main-valve seat.

H' H^2 H^3 are ports connecting the interior

of the auxiliary valve and the interior of the pressure-cylinder and valve-casting, respectively.

I′ is a water-passage, and J′ a U-shaped compartment.

K′ is a wall separating the U-shaped compartment and the water-passage.

L′ is a water-stop to partly obstruct the port H², so that the water can but slowly escape from under the piston, and therefore the main valve can but slowly close.

M′ is a nozzle.

N² is a collar secured to the pipe A so as to rotate with it, and having cast upon it the lugs O′, with suitably-inclined faces between them.

P′ are arms attached to the case H to support the rollers Q′, which are secured in place in spring bearings Q², so that they may be moved outward and inward along the arms and bear upon the collar N².

R′ are adjustable coiled springs, having their seats at one end upon the projections A² of the arms P′, and at the other end upon the shoulders A³ of the adjusting-nuts A⁴.

B² indicates hardened-steel balls, which travel in a groove C² on the top of the case H. The rotating collar N², resting upon these balls, sustains the weight of the column A and allows it to turn freely with minimum resistance from friction.

E² is a pit, within which the valve mechanism is buried and covered by a heat-non-conducting platform F².

3 is a pipe for supplying water to the column through the valve.

In operation, when it is desired to turn on the supply of water, the spout B being swung around over the engine-tank at right angles to the track, and being depressed so as to enter the man-hole of the engine-tank, the lever M is pulled outward from the column A. This movement of the lever M serves, through the connecting-rods and bell-crank, to lift the grooved collar S, which depresses the inner end of the lever T, and, by means of the connecting-link X, the lever Y, so as to operate the auxiliary valve Z. At the same time, through the connecting-rod A′, the drain-piston B′ within the drain L is lifted, so as to close the drain. The depression of the lever Y turns the wall K′ so as to form a communication between the port H′ and the U-shaped compartment J′ of the auxiliary valve, and at the same time to place the ports H² and H³ in communication through the water-passage I′. By this means a flow of water from the supply-pipe 3 is forced beneath the piston C′, so as to lift the main valve F′ and to permit the passage of the water through the valve-seat G′ and up through the column A. By reverse motion of the lever M the grooved collar S is depressed, and the lever T, moving with it, raises the lever Y to operate the auxiliary valve Z. At the same time the piston B′ is depressed, so that the water within the elbow J finds an exit through the drain L and is discharged. The lever Y being raised and the auxiliary valve Z operated, the port H² and the U-shaped compartment J′ are placed in communication, while the ports H′ and H³ communicate with each other through the water-passage I′. The water-pressure from the supply-pipe 3 is then exerted upon the top of the piston C′, and gradually depressing it forces the main valve F′ down upon the valve-seat G′. The water in the lower part of the pressure-cylinder W, passing out through the port H² and under the stop L′, discharges gradually through the nozzle M′, so that the main valve is not closed with a shock. When the lever M is turned back toward the stand-pipe, the spout B is turned around parallel to the track and is held in this position by the rollers Q′ pressing against the depressions between the lugs O′, so that the pipe may not be turned by the wind. The rollers Q′, pressing against the inclined faces between the lugs O′, serve not only to hold the pipe in position when placed out of the way, but to help to bring it around to its true position for use and to hold it there.

I do not claim the parts of the valve used, because they have been embodied in another application, and they are described only that their relation to the stand-pipe may be apparent.

I claim as of my own invention—

1. The combination of the main-valve casting, the elbow J, the case H, secured thereto, the stand-pipe rotatable within the case H, the collar N², secured to the stand-pipe and provided with the lugs O′ and inclined faces between them, the arms P′, secured to the case H, and adjustably-yielding rollers Q′, supported by the arms and bearing upon the collar N², substantially as set forth.

2. The combination of the rotatable stand-pipe A, the spout B, flexibly connected thereto, the bars D D, secured to the spout, the bifurcated lever E, pivoted to the bars and to the stand-pipe A, the counter-weight D³, the rod D⁵, pivoted to the counter-weight, and the guide D⁴, through which the rod passes, substantially as set forth.

3. In combination with the main-valve casting, the elbow J, the case H, secured thereto, the stand-pipe rotatable within the case H, the collar N², secured to the stand-pipe and provided with the lugs O and inclined faces between them, the adjustable yielding rollers Q′, supported upon the case H of the main valve and the auxiliary-valve mechanism, a grooved collar on the stand-pipe, a pivoted lever connecting the collar to the auxiliary valve, and rods and a lever for raising and lowering the collar, substantially as set forth.

In testimony of all which I have hereunto subscribed my name.

HUBERT F. PROBERT.

Witnesses:
EDWIN H. HENDERSON,
L. B. PLACE.

87

(No Model.) 2 Sheets—Sheet 1.

A. W. STREET.

APPARATUS FOR SPRINKLING WATER UPON HOGS.

No. 444,143. Patented Jan. 6, 1891.

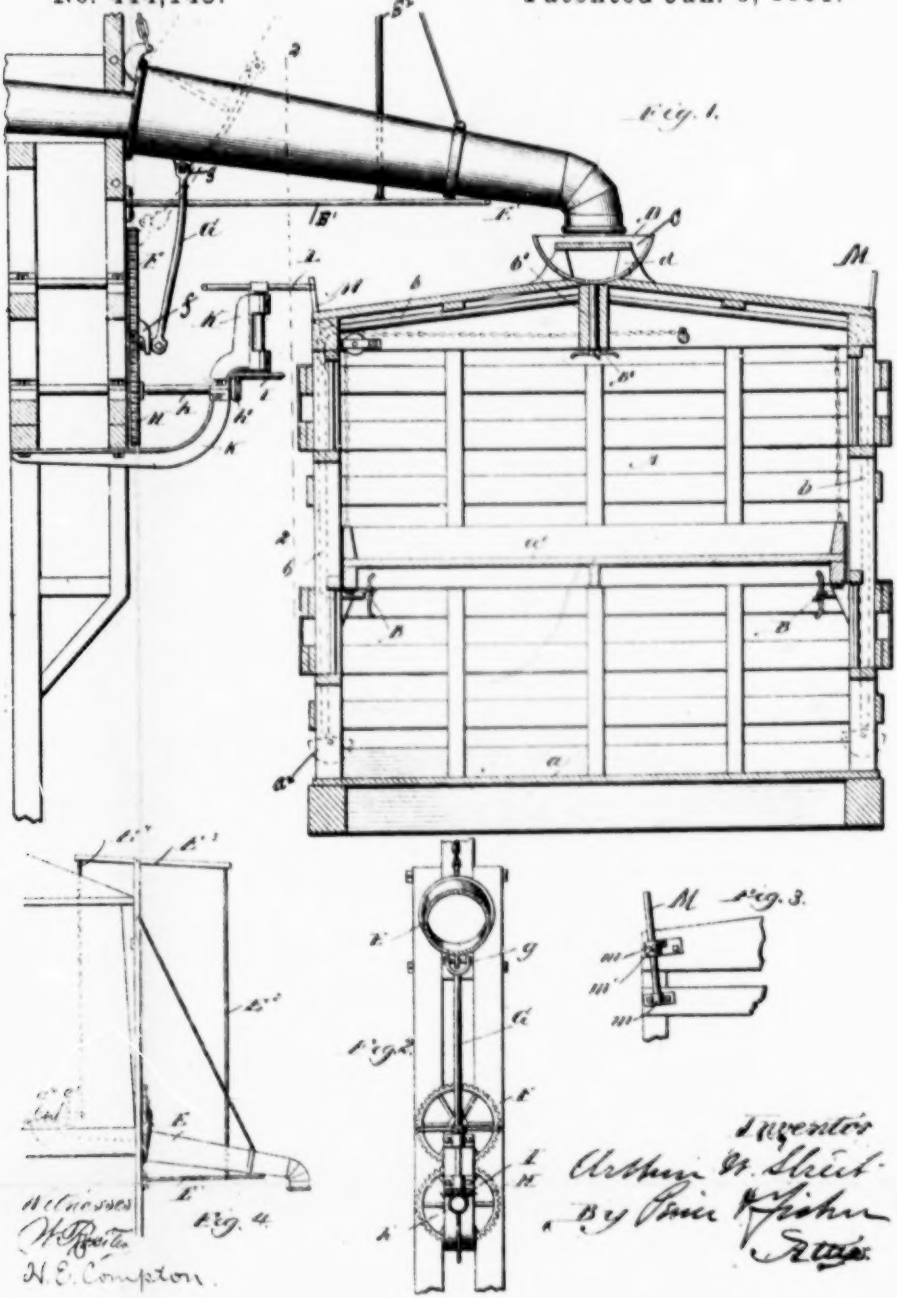

Witnesses
W. Rossiter
H. E. Compton.

Inventor
Arthur W. Street
By Peirce & Fisher
Attys.

88

(No Model.) 2 Sheets—Sheet 2.

A. W. STREET.

APPARATUS FOR SPRINKLING WATER UPON HOGS.

No. 444,143. Patented Jan. 6, 1891.

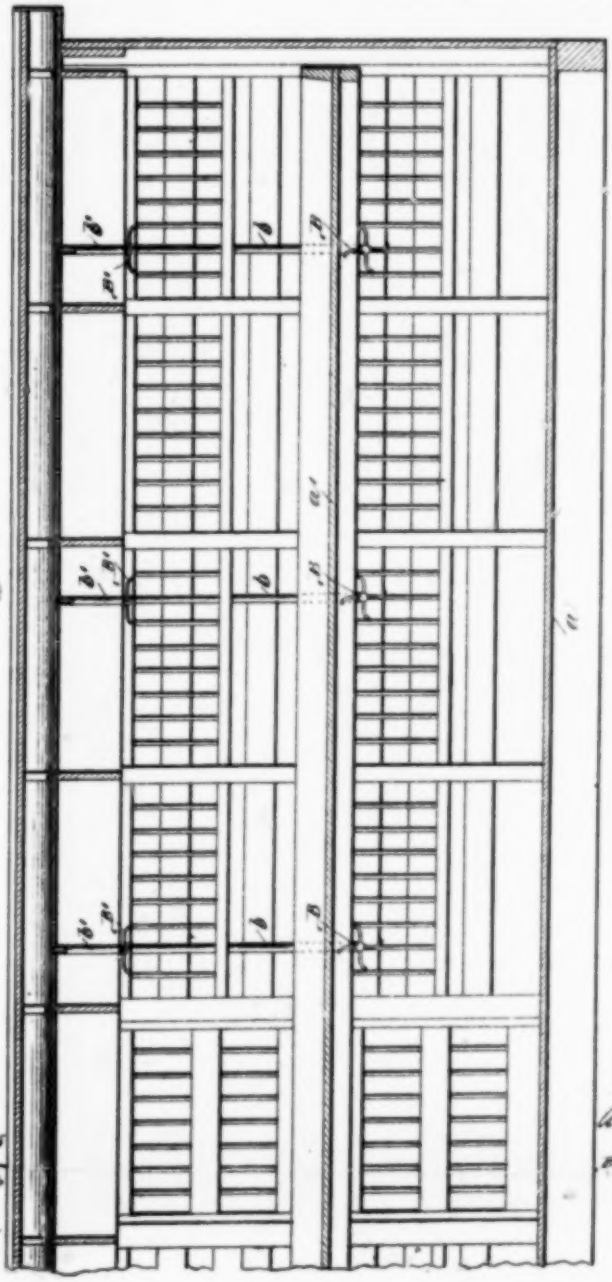

Fig. 5.

Witnesses
W. Bowles
H. S. Compton

Inventor
A. W. Street
by Prince & Co.
Attys.

89

UNITED STATES PATENT OFFICE.

ARTHUR W. STREET, OF CHICAGO, ILLINOIS.

APPARATUS FOR SPRINKLING WATER UPON HOGS.

SPECIFICATION forming part of Letters Patent No. 444,143, dated January 6, 1891.

Application filed July 24, 1890. Serial No. 359,821. (No model.)

To all whom it may concern:

Be it known that I, ARTHUR W. STREET, residing at Chicago, in the county of Cook and State of Illinois, have invented certain new and useful Improvements in Apparatus for Sprinkling Water upon Hogs, which improvements are applicable in part to other purposes, of which I do declare the following to be a full, clear, and exact description, reference being had to the accompanying drawings, forming part of this specification.

The transportation of hogs by railway is usually effected in what are known as "double-decked" cars, and the hogs are huddled together in such numbers upon the decks of the car that it is almost impossible for the hogs in the central portions of the car to reach the watering-troughs at the sides of the car. A source of great loss in the transportation of hogs is due not merely to death from thirst, but in warm weather to the intense heat, which causes also a great shrinkage or loss in weight of the stock.

My present invention has for its object to provide means whereby, without the necessity for stopping the train and without the necessity of an attendant, water from a suitable way-station tank can be delivered into suitable troughs upon the cars to be afterward sprinkled over the hogs.

To this end my invention consists in the various novel features of construction hereinafter described, illustrated in the accompanying drawings, and particularly pointed out in the claims at the end of this specification.

Figure 1 is an end view of a double-deck stock-car having features of my invention applied thereto, the tank for admitting water to the car, and apparatus for controlling the flow of the water from the tank being also illustrated. Fig. 2 is a view in vertical section on line 2 2 of Fig. 1. Fig. 3 is a detail end view of the car, showing a projecting arm. Fig. 4 is a view in side elevation of an elevated tank. Fig. 5 is a view in vertical longitudinal section through the car.

A designates the body of a car, having a floor *a* and a central deck *a'*, this deck being preferably provided with suitable mechanism, whereby it may be raised and lowered in well-known manner. At the sides of the car suitable watering troughs *a²* may be provided, if desired. At convenient distances along one or both sides of the car are placed the spray-nozzles B, which serve to deliver the supply of water onto the hogs within the lower compartment of the car, these nozzles B being connected by supply-pipes *b* with a main supply-trough C upon the top of the car.

In the upper portion of the car, beneath the roof thereof and at convenient distances apart, are arranged the spray-nozzles B', whereby water will be sprinkled upon the hogs within the upper compartment of the car, the nozzles B' being connected by suitable supply-pipes *b'* with the trough C. The trough C may be of any suitable shape and construction, and preferably is extended from end to end of the car. By preference, also, this open-topped trough is located at the center of the car-roof, and the running-board D, over which the train-hands pass, may be located within the trough, being sustained therein upon suitable standards *d*.

The trough C will have its ends closed and will be of convenient height to receive the water from the spout E of a suitable elevated water-supply tank. It will thus be seen that when water is admitted from the spout E into the trough C of the car it will pass by the delivery-pipes *b* and *b'* to the spray-nozzles B and B', and will be distributed by these nozzles over the hogs within the upper and lower compartments of the car.

While I regard the construction above described as very effective for spraying the water upon the hogs, I do not wish to be understood as claiming such construction in this application, as the invention relates to the mechanism for controlling the supply of water to the elevated troughs, as will hereinafter more fully appear.

In order to automatically throw the spout into position to discharge water into the trough C and to automatically cause the flow of water from the tank through the spout E, I prefer to provide the mechanism next to be described. The spout E of the water-supply tank will be so sustained that its outer end can be raised and lowered, and this spout will be counterweighted in well-known manner in order to permit it to be readily operated. An effective form of apparatus for raising and lowering the spout may consist of a gear-

wheel F, having a lug *f* projecting laterally therefrom, to which lug will be connected by a swivel-joint an arm G, the opposite end of which arm will be attached by a loose joint, as at *g*, to the spout E. Hence it will be seen that as the gear-wheel F is rotated it will cause the arm G to move up and down, and consequently raise and lower the spout E. With the gear-wheel F will engage a pinion H, carried by the shaft *h*, to the outer end of which is keyed a beveled pinion *h'*, that engages with a beveled gear-wheel I on the lower end of a short vertical shaft that is journaled within a suitable bearing at the outer end of the bracket K. Upon the upper end of this short vertical shaft is also fixed the spider-arms L, preferably four in number, these arms being extended outwardly in such position that they may be struck by a suitable projection upon the car in order to effect the rotation of the arms L and of the shaft and parts connected therewith. The rotation of the arms L may be conveniently effected by simple arms or projections, M, preferably one at each corner of the car, these arms being movably sustained within the loops or straps *m*, so that they can be raised to the elevated position shown or lowered to such position that they will not effect the movement of the spider-arms L. A suitable set-screw *m'* may be employed to hold the arms M in elevated position; or these arms or projections may be arranged in any other suitable manner adapting them to contact with and operate the projecting arms L.

In making up a train of stock-cars the arms M at the front end of the front car of the train and the arms M at the rear end of the rear car will be held in raised position, so that when the train reaches an elevated tank of the character described one of the front arms M will contact with one of the spider-arms L and will cause this arm to move and turn the gear-wheel I a quarter of a revolution. This movement of the gear-wheel I will, through the beveled pinion *h'* and shaft *h*, impart a half-revolution to the pinion H, and through this pinion H a half-revolution will be given to the wheel F, thereby causing the arm G to swing downward the tank-spout E to the position shown by full lines in Fig. 1. At the same time, also, as the spout E is swung to its lowermost position it will contact with the swinging arm F', which, through the medium of the rod E^2 and pivoted lever E^3 and rod E^4, lifts the pivoted lever e^4, that carries the valve e^5, (shown by dotted lines in Fig. 4,) thereby permitting the flow of water from the tank through the discharge-spout. Hence it will be seen that as the train passes the supply-tank water will flow through the tank-spout E into the several troughs C of the train, and from these troughs C it will pass by the delivery-pipes *b b'* to the spray-nozzles B B', and will thus be sprinkled upon the stock within the cars.

While I have shown what I regard as a convenient means for effecting the delivery of water into the trough C, I do not wish my invention restricted to this precise mechanism, since obviously the shifting of the tank-spout E and the operation of the valve for controlling the flow of water from the tank may be effected in other convenient ways.

In case it is desired to simply employ the trough C to admit water to the usual water-troughs a^2, perforations may be made in the delivery-pipes *b*, adjacent to the spray-nozzles B and B'. It will thus be seen that my invention affords a simple and effective means for admitting water to the storage-troughs of the cars, whereby the necessity for a stoppage of the train to turn on and off the supply of water is avoided, and, it will be understood, however, that features of the invention may be employed without its adoption as an entirety. For example, the water may be delivered into the troughs C by other convenient means than that shown.

Having thus described my invention, what I claim as new, and desire to secure by Letters Patent, is—

1. The combination, with a stock-car having a suitable trough to receive water, of a tank-spout, a valve for controlling the flow of water through said spout, a suitable projection or arm upon the car, and intermediate mechanism whereby the arm or projection upon the car can operate said valve, substantially as described.

2. The combination, with a stock-car having a suitable trough to receive water, of a movable tank-spout, a valve for controlling the flow of water through said spout, a suitable projection or arm upon the car, and intermediate mechanism whereby the arm or projection upon the car can operate said valve and move said spout into position for delivering the supply of water into the troughs on the car, substantially as described.

3. The combination, with a stock-car having a suitable trough to receive water, of a tank-spout, a valve for controlling the flow of water through said spout, a suitable projection or arm upon the car, a series of movable arms adjacent to the tank, a valve for controlling the flow of water through the tank-spout, and connecting mechanism between said valve and said movable arms, substantially as described.

4. The combination, with a stock-car having a suitable trough to receive water, of a vertically-movable tank-spout, a valve for controlling the flow of water through said spout, a suitable projection or arm upon the car, projecting arms adjacent to the tank, and gear mechanism connecting said projecting arms with said valve and with said movable tank, substantially as described.

ARTHUR W. STREET.

Witnesses:
GEO. P. FISHER, Jr.,
J. B. CARPENTER.

(No Model.) 2 Sheets—Sheet 1.

J. B. WHITE.

RAILWAY WATER TANK VALVE.

No. 550,737. Patented Dec. 3, 1895.

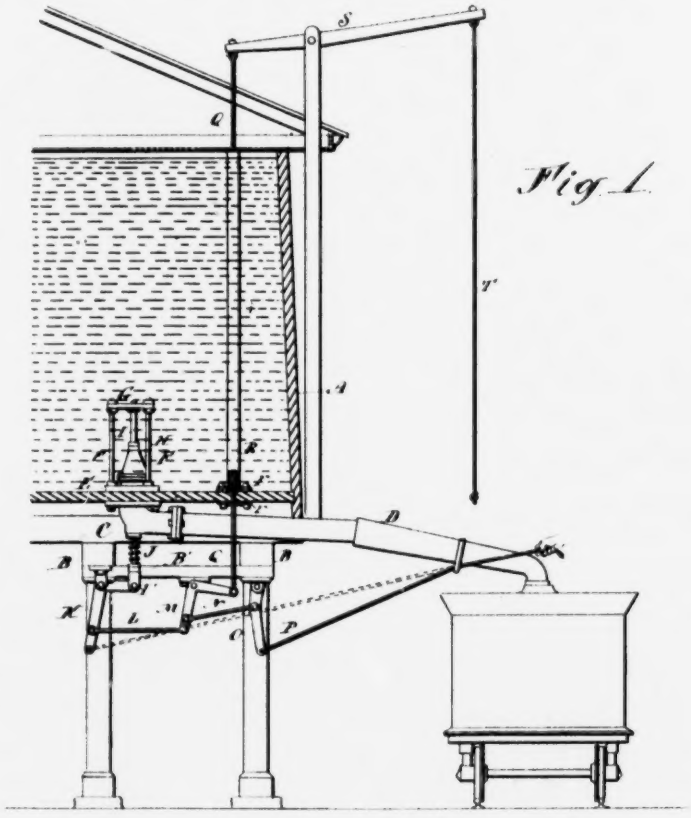

Fig. 1.

Attest.
L. A. St. John.
Jos. Kuhnell

Inventor.
John B. White.
By J. M. St. John
Atty.

(No Model.) 2 Sheets—Sheet 2.

J. B. WHITE.

RAILWAY WATER TANK VALVE.

No. 550,737. Patented Dec. 3, 1895.

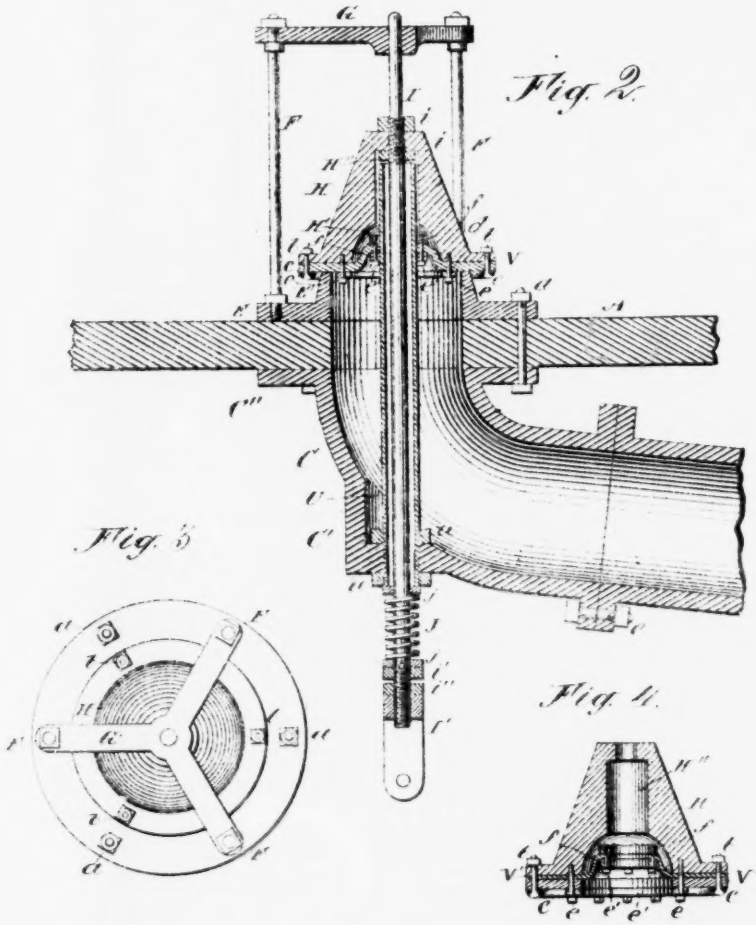

Attest
L. A. St. John
Jos Kubiak

Inventor
John B. White.
By J. M. St. John
Atty.

UNITED STATES PATENT OFFICE.

JOHN B. WHITE, OF CEDAR RAPIDS, IOWA, ASSIGNOR OF ONE-HALF TO JOSIAH WHITE, OF SAME PLACE.

RAILWAY-WATER-TANK VALVE.

SPECIFICATION forming part of Letters Patent No. 550,737, dated December 3, 1895.

Application filed March 25, 1895. Serial No. 543,033. (No model.)

To all whom it may concern:

Be it known that I, JOHN B. WHITE, a citizen of the United States, residing at Cedar Rapids, in the county of Linn and State of Iowa, have invented certain new and useful Improvements in Railway-Water-Tank Valves; and I do hereby declare the following to be a full, clear, and exact description of the invention, such as will enable others skilled in the art to which it appertains to make and use the same.

The object of this invention is to provide a railway water-tank with a valve operated from below, thereby avoiding the freezing up of the valve-rod, which is a common source of delay and annoyance.

My object is also to improve the construction of the valve with a view to greater durability and efficiency, as will hereinafter more clearly appear.

The invention consists in the construction, combination, and arrangement of parts, as will be hereinafter fully set forth and claimed.

In the accompanying drawings, forming a part of this specification, Figure 1, Sheet 1, is an elevation of a device embodying my invention as applied to a tank, the tank being in section. Fig. 2, Sheet 2, is a longitudinal section of the valve and its connections in a vertical plane, but without the operating mechanism. Fig 3 is a plan view of the valve as seen from above. Fig. 4 is a central vertical section of a valve with a modified form of packing.

Similar letters of reference indicate corresponding parts.

In the practical operation of railway-tank valves much difficulty arises through the breakage of parts, the freezing up of the valve-rod and other disabling causes. As ordinarily constructed the valve is connected with a hinged lever operated by a rod extending upwardly and connected with a lever at the top of the tank. It is very common for the valve connections to break, leaving the valve closed. It then becomes necessary to tap the tank and let out the water before the damage can be repaired, entailing more or less expense and delay. A still more common difficulty is the freezing fast of the valve-rod, making it necessary to climb up into the tank and chop it loose. These difficulties I seek to avoid by the apparatus hereinafter to be described. I further aim to make the valve more reliable in its action by giving it a considerable weight and providing for a direct vertical movement of the same.

Referring now to the drawings, A designates an ordinary water-tank, mounted on suitable supports B B. Below the floor is the outlet C, communicating with the usual swing-pipe D. The outlet-elbow C' is secured to the floor of the tank by bolts *a a a* passing through its flange C'' and also through the flange of the valve-seat E directly above and on the inside of the tank. This valve-seat has an annular upwardly-extending portion E', forming the valve-seat proper.

In the flange of the valve-seat are secured two or more posts, preferably three, supporting a spider G, the hub of which has a central hole therein serving as a guide for the upper end of the valve-rod I. To this rod is secured, as by nuts *i i*, the valve H. This is a heavy conical body, of iron, with a flange at the lower end extending somewhat outside the valve-seat. In the center, below, is a large cavity H', adapted to give room for a dome-shaped elevation in the center of the packing-diaphragm V, which will be more fully described hereinafter. The cavity terminates in quite a deep recess H'' to receive the upper end of the pipe U, through which the valve-rod passes. In the upper end of the valve is a suitable hole for the rod.

The pipe U is secured in an angular projection C' of the elbow C by a pair of nuts *u u*. The joint is preferably water-tight. The upper end of this pipe passes through a hole in the center of the diaphragm V, which fits snugly thereon, and is held in close contact therewith by a pair of rings *f f*, connected by suitable screws *e' e'*.

The diaphragm V is made with a dome-like central portion, which is secured to the pipe U, as described, but admits of a limited vertical movement of the valve H, to which its outer portion is secured. It is fastened to the valve by a pair of rings *c* and *d*, attached by bolts *b* and *e*. The outer ring *c*, being at

all times exposed to contact with the water, is preferably made of non-corrosive metal, as brass. The inner one may be of iron.

To the lower end of the valve-rod is connected, as by screwing thereon, a suitable coupling I' for connection with a bell-crank lever K. A spring J, mounted on the rod between two washers *j j'*, acts in connection with the gravity of the valve to seat the valve as soon as released. The pressure of this spring may be regulated by a nut *i'*. A jam-nut *i''* serves to secure the coupling I' firmly in place.

The bell-crank lever K has a hinged connection with one of the timbers under the tank and serves to lift the valve when the lower end of the lever is drawn outwardly. This may be done by a rope or chain running directly to the swing-pipe D, as shown by the dotted lines, in case only a lateral pull is required. Where, however, it is desired to provide for a downpull, one or more intermediate levers are introduced. A bell-crank lever M has a hinged connection with the timber B' and connects with the lever K by a suitable rod L. A rod Q connects with the other arm of the bell-crank and extends up through a pipe R in the tank to a connection with the usual lever S at the top of the tank, operated by the rope T. The lower end of the pipe R screws into one of a pair of flanges *r r*, by which a tight connection is made with the floor of the tank.

In order to provide suitable leverage for the lateral pull, I use another lever O near the front side of the tank and connected with the lever M by a rod N. To the lower end of this is connected a rope or chain P, passing through the usual ring on the swing-pipe.

In practice I prefer to use the lateral pull entirely, dispensing with the apparatus necessary for the downpull. This is not only on the ground of a decrease in expense, but also to avoid the use of the pipe R, which permits a current of cold air to pass up through the water, tending more or less to the freezing of the contents of the tank in extreme cold weather. It will be seen, however, that with either construction there is no possibility of the valve-rod becoming frozen fast unless the water in the tank is very low, which need not ever take place. A very common source of trouble and delay is thus entirely removed. It is to be observed, further, that the connections of the valve-rod with the actuating mechanism are below the tank and external thereto, so that in the event of the breakage of a lever, pin, or other part repairs may be easily and quickly made.

As the packing portion of the valve is exposed to more wear than the diaphragm, it may be desirable to make it separate from the diaphragm, as shown in Fig. 4. In this case the diaphragm V' may be comparatively thin and of uniform thickness throughout. The packing V'' is a simple ring or gasket, rubber being preferred in the construction of both.

In the operation of the valve, as will be readily understood, the valve and rod lift straight up to open the outlet. The central portion of the diaphragm being fastened to the pipe U does not move, of course, and folds downwardly until the dome is reversed and becomes a cup. This prevents the water from coming in contact with the rod except above the valve, so that there is no possibility of freezing it fast. The direct vertical lift of the valve and positive position of the same also insure a seating of the same with a uniformly tight joint, as heretofore mentioned.

One of the most serious difficulties connected with the freezing of the valve-rod is due to the fact that after fastening the rod in the ice the expansion due to further freezing lifts the rod and opens the valve, thus flooding the track and sometimes causing disastrous casualties to trains.

It is to be noted that the washer *j* is a flexible-packing washer, and one of its chief objects is to exclude cold air from the interior of the pipe U. The spring J seats it firmly against the nut *u*.

Having thus described my invention, I claim—

1. The combination with a tank, of an outlet pipe, a valve-seat above the inlet end thereof, a valve mounted above said seat, a rod connecting therewith, and extending down through said outlet pipe, with suitable provision for connecting the same with an actuating lever, a pipe inclosing said rod inside said outlet pipe, and a flexible diaphragm connecting centrally with said pipe near the upper end, and near the margin with the lower face of the valve, and forming a packing therefor, substantially as and for the purpose set forth.

2. The combination with a water-tank, of an outlet-pipe, a valve-seat mounted above the upper end thereof, a valve-rod extending upwardly through said outlet pipe, and connecting with a valve near the upper end, a guide for the upper end of said rod, a pipe inclosing said rod within the outlet pipe, and a flexible diaphragm connecting centrally with said pipe near the upper end, and near the margin with the lower face of the valve, and forming a packing therefor, substantially as and for the purpose set forth.

3. The combination with a water-tank, of an outlet-pipe secured to the bottom of the tank and below the same, a valve-seat mounted above the inlet end thereof, a vertical pipe secured in the elbow of said outlet-pipe, a valve with a cavity in the under side to receive the upper end of said vertical pipe, a flexible diaphragm with a concave in the center thereof, connecting the valve and the pipe, and a valve-rod connecting with the valve

near the upper end, and passing out through said vertical pipe below the outlet-pipe, substantially as and for the purpose set forth.

4. The herein described valve for water-tanks, composed of the block H, having a cavity on the under side to receive the upper end of a pipe and connected diaphragm, the said pipe, a flexible diaphragm connected to the lower face of said valve and concaved in the center, and a rod connected with said valve, substantially as and for the purpose set forth.

5. In a valve for water-tanks, the combination of the conical block H, having cavities H' H'', the diaphragm having a concave central portion adapted to connect with a vertical pipe, the said pipe, the holding rings *c* and *d*, and means substantially as specified for lifting said valve.

6. In a valve for water-tanks, the combination of the conical block H, having cavities H' H'', the flexible diaphragm V', the packing-ring or gasket V'', and rings *c*, *d* and *f f*, substantially as and for the purpose set forth.

7. In a valve for water-tanks, the combination of the valve H, the flexible diaphragm V connected marginally therewith, the pipe U passing through and connected with the center of the diaphragm, the rod I passing through said pipe and valve, and having a portion extending above the valve, the valve-seat E, posts F F F extending upwardly therefrom, and a guide G connected with their upper ends, and through which the rod I passes, substantially as and for the purpose set forth.

In testimony whereof I affix my signature in presence of two witnesses.

JOHN B. WHITE.

Witnesses:
JOSIAH WHITE,
J. M. ST. JOHN.

96

No Model. 4 Sheets—Sheet 1.

J. HENDERSON.

STAND PIPE FOR LOCOMOTIVES.

No. 596,590 Patented Jan. 4, 1898.

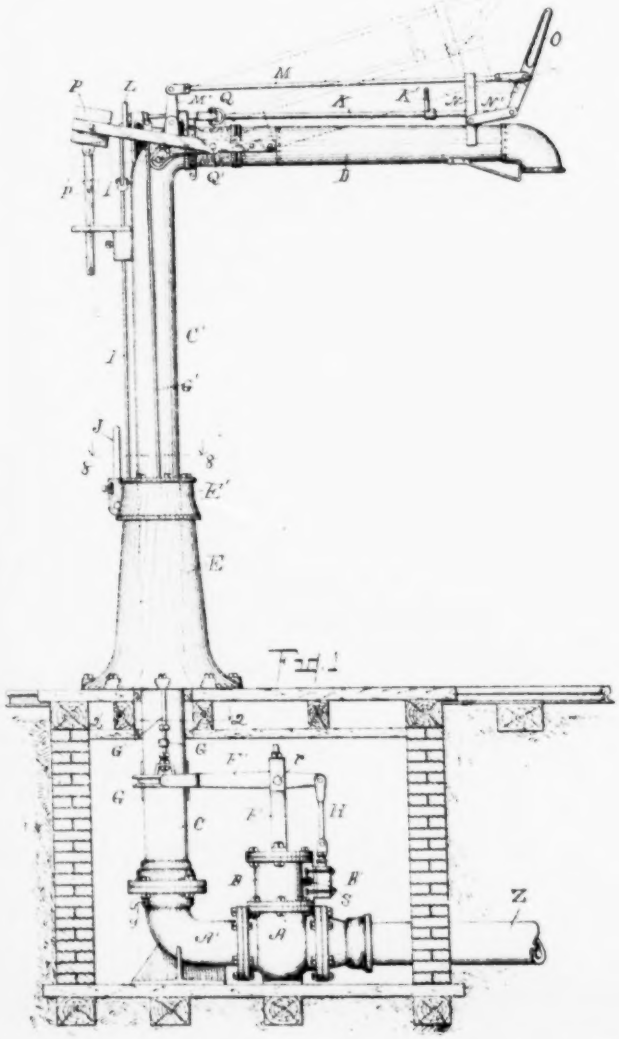

Witnesses:

Walter S. Lloyd

Marian Longwell

Inventor,

James Henderson

By Fred L. Chappell

Att'y.

97

(No Model.) 4 Sheets—Sheet 2.

J. HENDERSON.

STAND PIPE FOR LOCOMOTIVES.

No. 596,590. Patented Jan. 4, 1898.

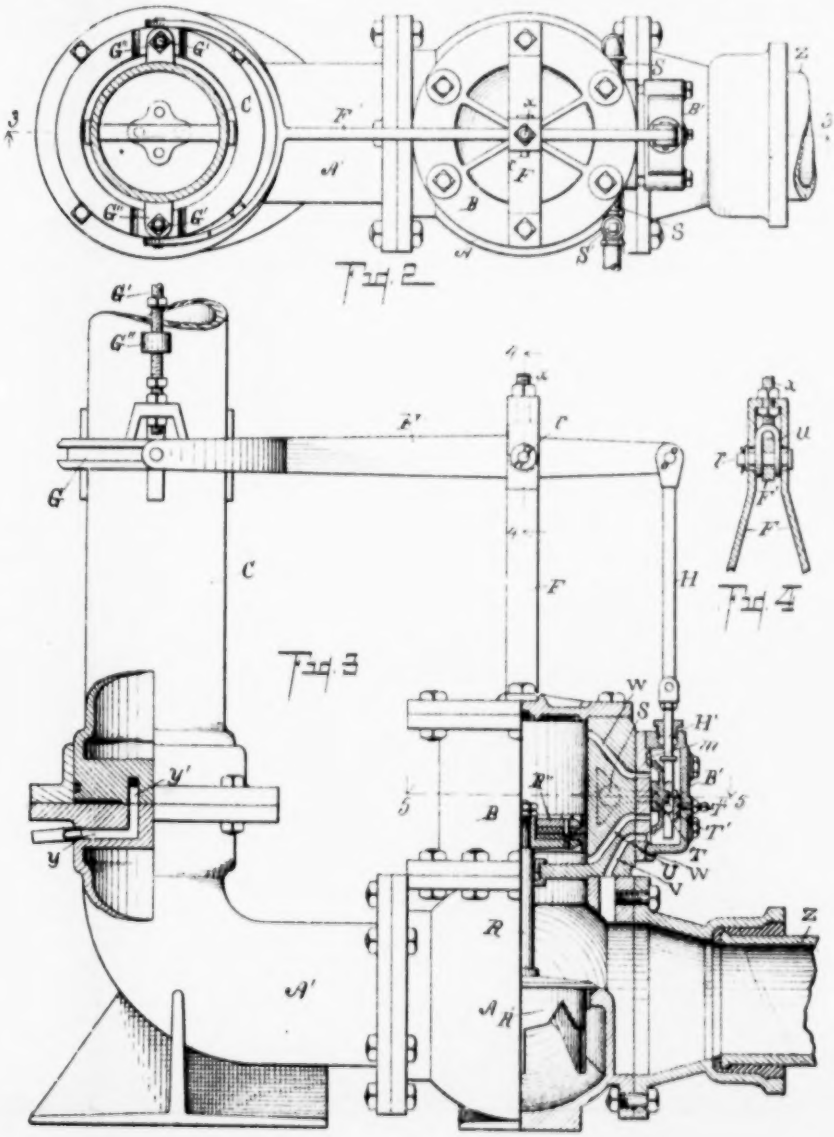

Witnesses:

Walter S. Wood

Marian Longyear

Inventor.

James Henderson

By Fred L. Chappell

Atty.

(No Model.) 4 Sheets—Sheet 3

J. HENDERSON.

STAND PIPE FOR LOCOMOTIVES.

No. 596,590. Patented Jan. 4, 1898.

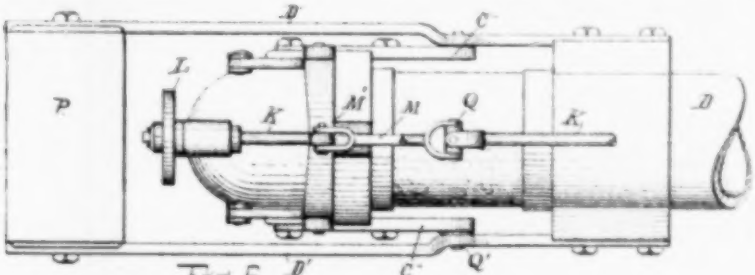

Fig 6

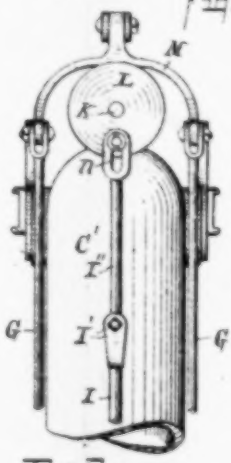

Fig. 7

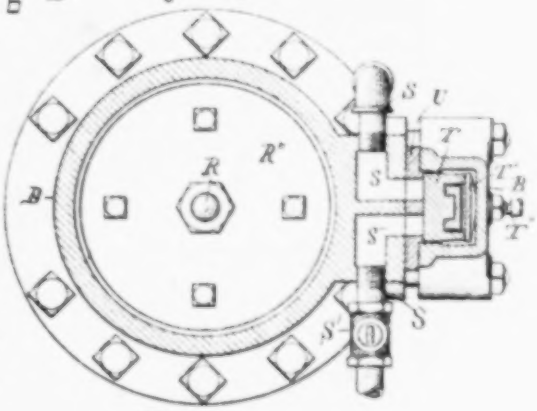

Fig 5

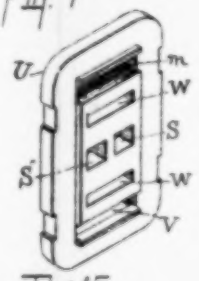

Fig. 15

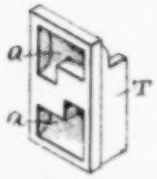

Fig 16

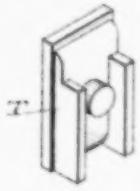

Fig 17

Witnesses:
Walter D. Covell
Marion Longyear

Inventor.
James Henderson
By Fred L. Campbell
Atty.

(No Model.) 4 Sheets--Sheet 4

J. HENDERSON.

STAND PIPE FOR LOCOMOTIVES.

No. 596,590. Patented Jan. 4, 1898.

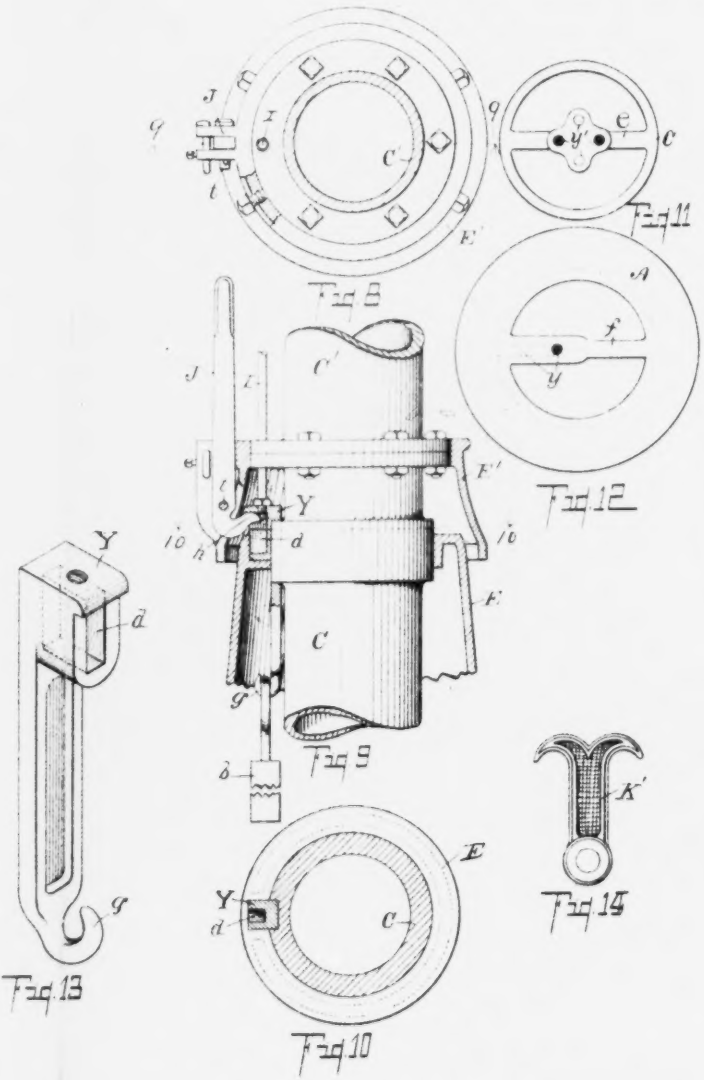

Witnesses:
Walter D. Wood
Marian Longyear.

Inventor,
James Henderson
By Fred L. Campbell
Atty.

UNITED STATES PATENT OFFICE.

JAMES HENDERSON, OF THREE RIVERS, MICHIGAN, ASSIGNOR TO THE SHEFFIELD CAR COMPANY, OF SAME PLACE.

STAND-PIPE FOR LOCOMOTIVES.

SPECIFICATION forming part of Letters Patent No. 596,590, dated January 4, 1898.

Application filed August 24, 1895. Serial No. 560,239. (No model.)

To all whom it may concern:

Be it known that I, JAMES HENDERSON, a citizen of the United States, residing at the city of Three Rivers, in the county of St. Joseph and State of Michigan, have invented certain new and useful Improvements in Stand-Pipes for Locomotives, of which the following is a specification.

My invention relates to stand-pipes for locomotives, and more particularly to that class of stand-pipes operated from the engine-tender.

As heretofore constructed numerous difficulties have been encountered in the construction of stand-pipes and in the operation of the same, among which are difficulties in securing a practical means of locking the stand-pipe in position at the side of the track and a binding of the pipe when it is turned, due to an unequal or uneven settling of the foundation and straining or breaking of the pipes by too rapid closing of the valve when water is shut off.

I have therefore for the objects of my invention, first, to provide a stand-pipe for railroads in which there is a positive locking mechanism which can be operated from an engine-tender for retaining the delivery-pipe in its position parallel to the direction of the track; second, to provide improved means of supporting the rotary part of the stand-pipe, so that a slight sinking or sagging of the foundation will not cause it to bind or become inoperative; third, to provide an improved valve for operating the engine, which opens and closes the valve, which will allow water to escape therefrom only slowly, so that as the valve closes it will not strain the water-main; fourth, to provide an improved means for locking and unlocking the pipe, which can be adjusted to be operated either from the engine-tender or from the ground; fifth, to provide improved means of locking the pipe, which can be adjusted to be operated from the ground if desired, or can be so adjusted that it will be possible to operate the same only from the upper part, as from the tender of the engine; sixth, to provide an improved construction in stand-pipes, whereby the drainage of the pipe will become entirely automatic when it is operated, so that all the pipe will be drained to a point below the frost-line in the pit below and will be drained only after the pipe has been used; seventh, to provide an improved lever and connections for operating the valve from the upper part of the pipe; eighth, to provide improved means of counterbalancing the weight of the horizontal portion of the delivery-pipe. Other objects will appear clearly from the detailed description. I accomplish these objects of my invention by the mechanism shown in the accompanying drawings, in which—

Figure 1 is a side elevation of a locomotive stand-pipe embodying all of the features of my invention. Fig. 2 is an enlarged detail sectional view taken on line 2 2 of Fig. 1, looking down. Fig. 3 is an enlarged detail view, partly in section, on line 3 3 of Fig. 2. Fig. 4 is an enlarged detail sectional view on line 4 4 of Fig. 3, looking in the direction of the little arrows at the end of the section-line. Fig. 5 is an enlarged detail sectional view on line 5 5 of Fig. 3, looking down. Fig. 6 is an enlarged detail elevation of the upper portion of the pipe, showing counterpoise-weight and lever connections at that part. Fig. 7 is an end elevation of the portion shown in Fig. 6, taken from the left-hand side of that figure, the counterpoise-weight being removed. Fig. 8 is a sectional view on line 8 8 of Fig. 1, looking down. Fig. 9 is an enlarged detail view, partly in section, on line 9 9 of Fig. 8. Fig. 10 is an enlarged detail sectional view on line 10 10 of Fig. 9, looking down. Fig. 11 is an inverted plan view of the bottom end of the pipe C. Fig. 12 is a top plan view of the flange portion and upper end of the pipe-elbow A'. Fig. 13 is an enlarged detail view of the locking-dog, which locks the pipe in position to the side of the track. Fig. 14 is an enlarged detail view of the lever or arm K', which actuates, through its connections, the locking-dog. Fig. 15 is an enlarged detail view of the detachable brass seat to the valve which actuates the engine-cylinder. Fig. 16 is a front perspective view of the valve T, and Fig. 17 is a rear perspective view of the same.

In the drawings similar letters of reference refer to similar parts throughout the several views.

Referring to the lettered parts of the drawings, Z represents the water-main.

A represents the large globe valve, opening from the water-main into the stand-pipe.

A' is the lower elbow of the stand-pipe, which supports the remaining portions above it. The lower portion C of the main stand-pipe is supported on the upper end of the elbow A'. Secured to the upper end of this by suitable flanges is the upper part C', to which the upper elbow of the pipe is attached, which connects to the drop-pipe. The water-main and the valve and the upper end of the elbow A' are all in a suitable pit below the frost-line.

The valve A is constructed in the manner of an ordinary large-sized globe-valve and is actuated by the engine B. Water is admitted from the water-main to actuate this engine by means of my specially-constructed valve, which will be more fully described in detail hereinafter.

The globe-valve A and the elbow A' are supported by suitably-formed bases on the same, which rest on a suitable plank or other foundation at the bottom of the pit above mentioned. To the flange on the upper end of the elbow A is secured a collar by a suitable flange. The upper end of the elbow has a suitable cross portion *f*, into which a hole *g* is drilled and carried out to one side, as indicated in Fig. 3. This hole *g* is drilled to one side of the center. On the lower end of the pipe C is formed a cross-piece *c*, which is suitably perforated at *g* at four points to each side of the center. Two of these points opposite each other are plugged, so that only two of the openings *g* are left for the passage of water. All of the holes are made in the casting and two are plugged after the position of the pipe is determined by the side of the track where needed, and the plugging of the holes is determined by the comparative direction of the water-main and railway-track. One of these holes *g* is located to register with the hole *g* after the pipe has been used and turned back to the side of the track. The pipe C, turning to one side, causes the hole *g'* to register with the hole *g* and drains the pipe down to this point; yet when the pipe is in use the drainage-hole is stopped, so that there is no leakage during the taking of water.

A further object attained by this construction is the support of the main heavy part of the pipe on the comparatively small space at the center of the pipe at this point and resting on the cross-piece *f*, the remaining parts at that point being a little separated, as is clearly indicated in Fig. 3. The support is at the central part and a packing-ring is around the lower end of the pipe C. The low collar, in connection with the central support, permits the pipe to tip slightly in any direction without causing it to bind in its bearings. This obviates a very great difficulty in the construction of heavy stand-pipes as ordinarily manufactured.

Surrounding the body of the pipe is a supplemental base portion E, which will be referred to hereinafter as the "platform-base" for guiding the pipe and retaining it in the vertical position. In the upper end of this portion, as indicated in Fig. 9, is an enlarged collar-like projection around the pipe C, and this is fitted into the upper end of the platform-base E and turns in the same, as in a bearing. Above this collar portion are suitable flanges, to which is secured the main upper vertical portion C' of the pipe. Around the flanges at this point is supported a suitable cover E' for the platform-base to afford the same protection and to carry the rotating and locking means.

In a suitable recess in the collar portion revolving in the upper end of the base E is supported a locking-dog Y, which is adapted to be carried around when the pipe is rotated. This dog consists of the lower slide portion with a hook at the bottom, to which a suitable weight *b* is attached to cause it to act promptly, and an outwardly-projecting engaging portion at the upper end. In this outwardly-projecting engaging portion at the upper end is a mortise *d*. The lever J is pivoted at *l* in the cover portion E' and has an inwardly-projecting curved portion *h*, adapted to enter the mortise *d* in the dog Y. A suitable hasp and lock are adapted to lock the lever J in position when it is not desired to rotate the stand-pipe from that point. The under side of the locking outwardly-projecting portion is rounded, so that it will ride easily upon the upper edge of the base portion E. When the pipe is turned to one side, it carries the locking-dog Y to a suitable depression in the base E, when it drops down and locks the pipe securely in position. To this dog Y is attached the connecting-rod I, which passes up to the rear of the vertical portion of the stand-pipe and is attached to a suitable wrist-pin in the disk L. The disk L is secured to a rock-shaft K, which extends along the top of the horizontal or drop portion of the pipe out toward the outer end and contains a universal joint at Q, which permits of the bending of the rock-shaft. The shaft is supported in suitable bearings along the top of the delivery-pipe D, which allow it to slide back and forth when the drop-pipe D is raised and lowered. Projecting upwardly from this rock-shaft K is a hooked lever or arm K', with hooks projecting to each side somewhat like the flukes of an anchor, as will be seen in Fig. 14. The connecting-rod I is connected to the wrist-pin on the back of the disk L by an elongated slot *o* in a suitable link or pitman connection I', the portion I being suitably guided up and down back of the pipe C and connected thereto by the joint I''. The mortise *d* in the dog Y is also vertically elongated.

It will be seen, therefore, by this construction when an engine is brought along to the side of the track and the fireman wishes to take water he hooks his poker over the arm K′ and draws the same toward him. The pulling on the arm causes the rock-shaft K to rotate, which by its action swings the disk L part way around, which actuates the rod I through its connections with the wrist-pin on the disk L, which pulls up the dog Y and releases the pipe. The fireman, continuing to pull, swings the pipe around over the engine into the appropriate position for taking water and operates the valve by the lever O, the connections of which will be explained hereinafter. The elongated slot *d* permits the operation of the dog Y in this way by allowing it to pass up over the curved projection *h* of the lever J. When it is desired to release the pipe and turn it from below, the lever J is unlocked and it is pushed down and, acting through the projecting portion *h*, raises the dog Y, and the lever can be carried around and swing the pipe to the desired position, the slot in the upper connection I″ on the disk L allowing the rod connected to the dog to raise up without operating the rock-shaft above. This means is effective and convenient for the purpose of making it possible to lock the lever which actuates the stand-pipe in position below without in the least disturbing the operation of the same from the upper end, which is very desirable in constructions of this character. The method of securing and locking the lever J in position is sufficiently shown in Figs. 8 and 9. Any usual means for locking it in that position is all that is required. It will be seen that the lever can be immediately locked, and when the pipe is returned to its position parallel with the track the dog will drop and lock it automatically.

To the upper main part C′ of the pipe are secured forwardly-projecting arms C″. To the horizontal or drop pipe D are secured rearwardly-projecting arms D′. These arms are pivoted to the arms C″ considerably to one side of the main portion of the stand-pipe. To the rear ends of the arms D′ and between them is supported a heavy weight P, which counterbalances the weight of the drop-pipe D, so that it can be raised and lowered and will stay in any position desired. Pivoted to the under side of the weight P is a downwardly-extending bar P′, which passes through a suitable guide to the rear of the stand-pipe. Suitable stops are on the bar P′ to limit the motion up and down of the drop-pipe D. It will be seen that by pivoting the arms which support the drop-pipe to one side the weight for counterbalancing the drop-pipe can be greatly reduced, and thus lighten the entire weight of the stand-pipe.

Toward the outer end of the drop-pipe D is an upwardly-extending arm N. Through the upper end of this arm N extends a rod M. The rod M is connected by a suitable pivotal connection to the lever O and the lower end of the lever O is connected by the link N′ to the lower part of the upwardly-projecting arm N. On the upper end of the main upper portion C′ of the stand-pipe is supported a double bell-crank M′, to which the rod M is connected. The lower arms of the bell-crank project rearwardly to each side of the upper end of the stand-pipe and to a point even with the central point of the main portion of the same. To these arms are attached rods G′, which extend down at each side of the main vertical portion of the stand-pipe and are attached by a suitable joint G″ to a collar G, which is on the lower portion C of the stand-pipe. This collar is guided to place on the stand-pipe and contains an annular groove around its periphery. (Indicated in Figs. 1 and 3.)

Projecting upwardly from the top of the engine-cylinder B is an arm F. On the upper end of this arm F is a pivotal support *r*, which is adjusted up and down by the screw *x* at the top, a yoke *u* extending downwardly to embrace the pivot *r*. On the pivot *r* is supported a lever F′, which is forked at its end next the stand-pipe and has suitably inwardly projecting portions to engage in the groove in the collar G, so that the collar can rotate within the forked arms of the lever F′ and engage the lever to operate it up and down. Connected to the other end of the lever is a pitman or link H, which connects to the valve-stem H′, which operates the engine-valve, which admits water from the water-main to actuate the engine-cylinder B.

The link connections to the lever O at the upper end of the stand-pipe and the sliding support for the rod M above permit the drop-pipe D to be raised and lowered, as indicated by dotted lines, without actuating the lever O to operate the valve, so that the drop-pipe D can be swung back and forth and raised and lowered, as desired, when required, and by operating the lever O the valve below can be opened and closed when the drop-pipe D is in the position required.

In the engine-cylinder B is a suitable piston-head R″, which is connected by a piston-rod R to the valve R′, which is in the valve-casing A. This piston R″ is suitably packed with a hydraulic packing. Suitable ports W W lead from the side of the cylinder to the slide-valve seat at the side. The seat portion of the valve U is made detachable, so that it can be renewed at any time. The slide-valve T operates over this valve-seat U. This valve is so connected that it takes water from the water-main to actuate the piston R″ to open the valve R′ in the stand-pipe, and this valve is so constructed that the exhaust-portage to the slide-valve is very large when the main valve in the stand-pipe is being opened and the exhaust-portage is comparatively small when the valve is being closed to retard the motion and close the same slowly to prevent undue strain on the water-main or hammering of the same. The valve is a slide valve

and operates much the same as an ordinary slide-valve by the stem H operating the same. The slide-valve T is pressed in place securely against its seat by the set-screw T'' acting on the plate T'. The stem H engages the boss on the back of the valve T, which appears clearly in Fig. 17 and also in Fig. 3. It is necessary to hold the compression-plate T firmly against the valve, for under certain conditions and positions of the valve the pressure is all from the under side of the valve and tends to displace it, which is overcome by the compression-plate. A port V leads from the water-main up through the valve-seat and into the valve-chest B', as shown at V in Fig. 15. The valve-seat is constructed in much the same manner as an ordinary valve-seat, with the exception that the exhaust-port at the center is here divided longitudinally of the valve into two exhaust-ports S and S', which extend separately to the outside atmosphere and exhaust separately to each side, as is indicated by the exhaust-pipes. (See Fig. 5.) An inlet-port *m* at one end is a mere depression in the valve C. The recesses *a a* in the valve T are formed to correspond to the ports S'' S, and these recesses are divided so that one end of the cylinder exhausts through the port S and the other end of the cylinder through the port S'', the exhaust end of the recess in the valve-slide being reduced in size and moved to one side and only of sufficient size to cover one of the exhaust-ports at a time. The recesses in the valve are substantially L-shaped and are symmetrical with each other. In the exhaust-port from which water exhausts when the piston is operating to close the main valve a suitable stop-cock S' is placed. (See Fig. 5.) The size of the opening in this exhaust is reduced in size to such an extent as to allow water to escape from the cylinder only slowly, which will cause the valve to move slowly to its seat and prevent undue strain upon the pipe due to the quick closing of the valve.

Having pointed out the various parts of my improved stand-pipe and described them particularly, I will now briefly state its operation from beginning to end when in use.

The pipe in its normal position stands with the drop-pipe D parallel with the track. The locomotive in taking water will stop so that its tender will be in the appropriate position. The fireman will take his poker, hook it over the hooked lever K', and draw toward him. This, acting through the rock-shaft and its connection, raises the dog Y and releases the pipe. He continues to pull and the pipe swings around to its appropriate position over the manhole of the tender. He then bears the end of the drop-pipe D down until it is well in the manhole. He then pulls the lever O toward him. This lever, through its connections with the rod M, the bell-crank M', the rods G', the collar G, the lever F', and the link H, actuates the slide-valve and admits water into the lower end of the cylinder B, which raises the piston quickly and opens the valve quickly and allows water to pass up through the stand-pipe and be delivered out into the tender of the engine. When the tank is full, the lever O is pushed back, which reverses the position of the valve T, allows water from the water-main to enter the upper end of the cylinder R, and exhausts it from the lower end. The exhaust from the lower end is choked by the stop-cock S', so that it can only exhaust slowly. The valve R' is thus pushed gradually to place and any hammering of the water in the main is prevented. The drop-pipe is then pushed by the poker back to its position parallel to the side of the track, to either side as desired. When it reaches the right position, the dog Y drops down and retains it securely there. In this position one of the holes *y'* registers with the hole *y* and drains the stand-pipe down to that point to prevent any bad effects from freezing. The main body of the pipe, resting by cross-piece *e* on the central portion of the cross-piece *y*, revolves very easily, and the packing-ring around the lower end of the pipe prevents any leakage. Thus the pipe operates with great ease and certainty and safety.

I desire to say with regard to my improved stand-pipe that it can be considerably varied in its details without departing from my invention, and various features of it can be used with entirely different styles of stand-pipes and accomplish their results in a very satisfactory manner, although they enter into the combination here and are particularly adapted to this style of construction of stand-pipe. For instance, the drainage feature of my improved stand-pipe could be made of use in almost any stand-pipe where the main body of the pipe rotates. It would also be desirable to support any of the usual styles of stand-pipes on a cross-piece at the center in order that they might swing easily on their axes. The particular balancing of the drop-pipe D is also adapted for use in any style of stand-pipe which makes use of a drop-pipe. By dispensing with the other connections than the lever J to the dog Y a very satisfactory pipe can be produced which is as quick and convenient in its operation as any two-man stand-pipe can possibly be. On the other hand, this lever could very conveniently be dispensed with where the connections at K' at the top are used for operating the same. I prefer, however, to construct my stand-pipe so that both of these features are attainable in the same pipe for matter of convenience and certainty. The improved valve which I have here shown could also be successfully used wherever it is necessary to close the valve against a large water-main on account of its efficiency and certainty of its action and the ease and convenience with which it is governed.

Having thus described my invention, what I claim as new, and desire to secure by Letters Patent, is—

1. In a stand-pipe for locomotives, the combination with the water-main, Z, of the valve-casing A; the engine-cylinder, B containing a piston connected to the valve in said casing for actuating the same; a slide-valve consisting of the seat having the port, V, connected to the water-main, and the ports W, W, to the cylinder, and the port, *m*, and two exhaust-ports, S, S', at the center; a slide, T, containing the L-shaped recesses, *a*, *a*, oppositely facing each other to slide over the valve-seat to admit water from the water-main to the engine-cylinder, B, and allow it to exhaust alternately through the ports, S, and S'', through suitable passages to the exterior; and a stop-cock, S', to regulate the flow of the exhaust, S'', to permit the piston to operate slowly in closing the valve to prevent injury from sudden closing, as specified.

2. In a stand-pipe for locomotives, the combination with the water-main; of a valve for opening and closing said water-main; an engine-cylinder, B, containing a piston connected to the lid in said valve for actuating the same; an engine slide-valve to said cylinder with a seat having ports to said water-main, ports to each end of the cylinder, and two exhaust-ports leading to separate passages to the outside; a slide with double recesses therein to admit water to the cylinder, each recess adapted to exhaust from the cylinder through its appropriate exhaust-port so that the exhaust from one end of the cylinder shall be through one port and from the opposite end through the other; and a suitable means of restricting the exhaust-port from the cylinder when the valve in the water-main is closing to regulate the closing of the valve to prevent damage from sudden closing of the same, as specified.

3. In a stand-pipe for locomotives, the water-main; the valve for opening and closing the same; an engine-cylinder containing a piston connected to said valve for actuating the same; a slide-valve to said engine-cylinder consisting of a seat as U; a slide portion, T, with guideways at the back; a compression-plate, T', to rest on said guideways; a set-screw, T'', for compressing said plate, T', against the slide, T, for holding it securely against its seat; a valve-stem, H', with a suitable recess therein for engaging a boss on the back of said slide, T, to permit the valve to be pressed to place securely and guided there to be actuated by the stem, without bending the same, as specified.

4. In a stand-pipe for locomotives, the combination with the water-main of a main elbow, A', the outer end of which is pointing upward; a cross-piece, *f*, across the upper face of said elbow containing a drainage-opening, *y*, which opens into the cross-piece to one side of the center; a suitable collar secured to the flange on the upper end of said elbow; an upright pipe supported inside of said collar; a cross-piece, *e*, across the lower end of said pipe, the central portion of which projects slightly downward and is adapted to rest on the cross-piece, *f*, the central part of the said central portion containing perforations, *y'*, *y'*, adapted to register with the drainage-opening, *y*, in the cross-piece, *f*, when the pipe is out of use and swung to one side of the track; a suitable packing-ring on the lower end of the upright pipe to form a water-tight joint between the lower end of the pipe and the collar, for the purpose specified.

5. In a stand-pipe for locomotives, the combination of the water-main with an upwardly-pointing elbow connected therewith; a cross-piece across the upper face of said elbow containing a drainage-opening, opening to one side of the center of the elbow; an upright pipe having a cross-piece at its lower end suitably guided to rest upon the cross-piece of said elbow and containing perforations which are adapted to register with the drainage-opening of the cross-piece of the elbow so that when the pipe is swung out of use the perforations shall register with the drainage-passage and drain the pipe to this point, and so that when the pipe is swung to the position for use the drainage-opening will be closed to prevent leakage at that point, as specified.

6. In a stand-pipe for locomotives, the combination of the upright revoluble pipe; a supplemental platform-base surrounding said pipe to guide the same in position; a suitable cover secured to the upright pipe projecting over the upper part of said platform-base to protect the same; a suitable weighted dog, Y, guided to the side of the upright pipe and adapted to travel around with the pipe and upon the upper edge of the platform-base; a suitable notch for said dog to engage in the upper edge of the base to secure the pipe in position; a lever, J, pivoted to the cover with an inwardly-projecting part projecting into an elongated mortise, *d*, in the dog, Y, to actuate the same to release the pipe so that it can be turned from side to side; a horizontal drop-pipe, D, connected to the upper end of the upright pipe; a rock-shaft, K, along said drop-pipe containing a universal joint near the point of connection of said drop-pipe and upright pipe; a disk, L, on the rear end of said rock-shaft; a connecting-rod, I, projecting upwardly from the dog, Y, through suitable guides; a link or pitman, I'', connected by the joint, I', to the rod, I, and by a slotted aperture, *n*, to a wrist-pin on the disk, L; an upwardly-projecting double-hooked lever, K', secured to the rock-shaft, K, in a suitable position on the drop-pipe to be engaged by the poker of the fireman so that he can exert force upon the same to rotate the rock-shaft and raise the dog, Y, and swing the pipe in position to deliver water to the locomotive or so that the pipe can be operated by the lever from the ground below without interfering with the remaining mechanism, all substantially as described for the purpose specified.

7. In a stand-pipe for a locomotive, the com-

bination with the upright revoluble pipe, of a suitable base surrounding the same to guide it to hold it in position; a drop-pipe connected to the upper part of said upright pipe; a rock-shaft supported on said drop-pipe; a disk, at the rear end of said drop-pipe; a dog guided on said upright pipe and adapted to engage a suitable notch in the upper edge of the base to lock the pipe when not in use, and connections from said dog to the disk on the rock-shaft; and an upwardly-projecting lever adapted to be engaged by suitable means so that force exerted at that point will raise the dog and swing the drop-pipe to position for delivery of water to a locomotive, all coacting as specified.

8. In a stand-pipe for locomotives, an upright revoluble portion; a drop-pipe connected thereto; a rock-shaft on said drop-pipe; a suitable dog on said upright pipe adapted to hold the pipe in position; connections from said dog to the rock-shaft for actuating the same; and a lever on said rock-shaft toward the outer end of the same adapted to be engaged by suitable means to actuate the rock-shaft to disengage the dog and release the pipe and allow the pipe to swing to position to deliver water to a locomotive, as specified.

9. In a stand-pipe for locomotives, an upright revoluble portion; a drop-pipe connected to the upper end thereof; a dog on said upright portion for locking the same in position when not in use; a lever at the upper outer portion of the drop-pipe; suitable connections from said lever to the dog so that force can be applied to the lever at the upper outer end of the drop-pipe to disengage the dog and carry the drop-pipe around in position to deliver water to a locomotive, as specified.

10. In a stand-pipe for locomotives, the combination of an upright pipe; a horizontal drop-pipe connected by a flexible connection thereto; a suitable auxiliary platform-base surrounding said upright pipe; a dog guided on said upright pipe adapted to travel on the upper edge of the platform-base and engage a suitable notch therein to retain the pipe; a suitable connection to said dog extending to the top of said upright pipe; an elongated slot in the upper end of said connection and an elongated slot in the lower part of said connection to said dog; means of actuating said connection above; and means of actuating said dog below, both operating against the upper sides of said slots so that the dog can be operated from the upper or lower position without interfering with each other or the remaining mechanism, as specified.

In witness whereof I have hereunto set my hand and seal in the presence of two witnesses.

JAMES HENDERSON. [L. S.]

Witnesses:

W. J. WILLITS,

L. B. PLACE.

No. 648,346. Patented Apr. 24, 1900.

J. N. POAGE.

WATER COLUMN.

(Application filed Feb. 9, 1900.)

(No Model.)

FIG. 1.

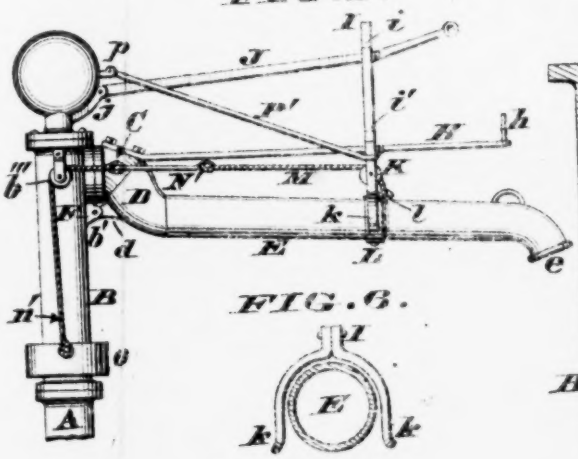

FIG. 3.

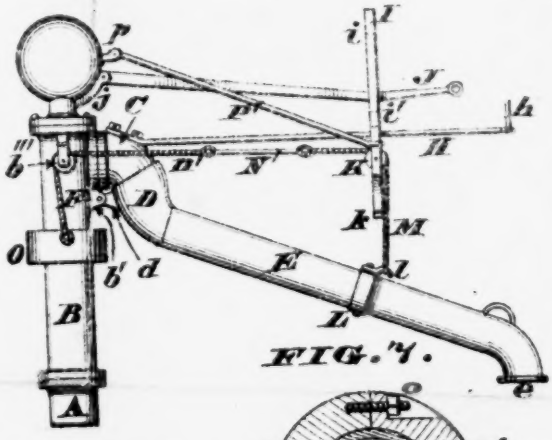

FIG. 2.

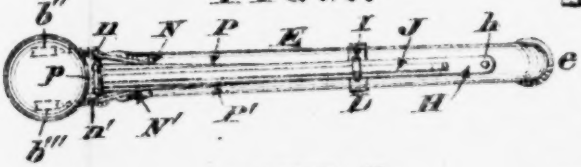

FIG. 4.

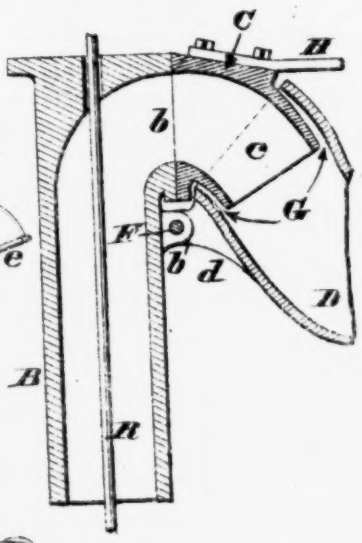

FIG. 5.

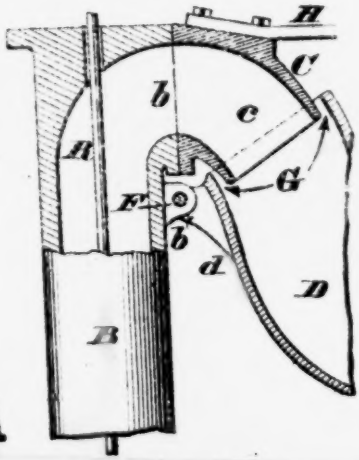

FIG. 6.

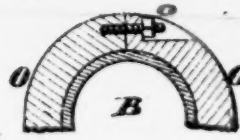

Attest.

Ida Hill

Samuel McQuinn

Inventor.

John N. Poage.

By James K. Layman

Atty.

UNITED STATES PATENT OFFICE.

JOHN N. POAGE, OF COLLEGE HILL, OHIO.

WATER-COLUMN.

SPECIFICATION forming part of Letters Patent No. 648,346, dated April 24, 1900.

Application filed February 9, 1900. Serial No. 4,628. (No model.)

To all whom it may concern:

Be it known that I, JOHN N. POAGE, a citizen of the United States, residing at College Hill, in the county of Hamilton and State of Ohio, have invented certain new and useful Improvements in Water-Columns; and I do hereby declare the following to be a full, clear, and exact description of the invention, reference being had to the accompanying drawings, which form a part of this specification.

My present improvements have been designed more especially to be used in conjunction with the peculiar water-column shown in Letters Patent No. 531,508, granted to me December 25, 1894, although said improvements are capable of application to many of the ordinary apparatus now employed for supplying locomotive-tenders with water.

The principal feature of said improvements is a novel coupling wherewith a discharge-spout is connected to an ascending main of the column, the object of this coupling being to enable the free end of said spout to be raised and lowered within any necessary range and without permitting leakage, although said joint is neither packed nor ground. In fact the joint is made so loose as to admit air at all times, thereby facilitating the flow of water through the spout and insuring its complete drainage, as hereinafter more fully described.

In the accompanying drawings, Figure 1 is a side elevation of the upper portion of my improved water-column, the discharge-spout being in its normal position and the lever that operates the valve-mechanism raised to stop the flow of water. Fig. 2 is a plan of said column. Fig. 3 is another side elevation of said column, but showing the spout lowered and the lever pulled down to start the flow of water. Fig. 4 is an enlarged vertical section showing my loose coupling in the same position as in Fig. 1. Fig. 5 is a similar section of the coupling in the same position as in Fig. 3. Fig. 6 is an enlarged transverse section showing the discharge-spout arrested by a forked stop. Fig. 7 is a similar section of a portion of a counterbalance for said spout.

A represents part of the ascending main of any approved form of water-column, although said main preferably communicates with a hollow base provided with a valve-operating mechanism of the character described in my Patent No. 531,508 above referred to. Rigidly secured upon this main is a vertical pipe B, having a lateral outlet *b*. (Shown in Figs. 1 and 5.)

C is a downwardly-inclined male coupling rigidly fastened to the pipe B and having a bore *c* of the same diameter as said outlet *b* and communicating directly therewith. Fitting loosely around the lower end of this male coupling is a female coupling D of a discharge-spout E, having a nozzle *e*. Again, this female coupling has a lug *d*, pivoted to a lug *b'*, projecting laterally from the pipe B, the pivot F being so located as to afford an annular space G between said male and female members. Projecting horizontally from the top of this male coupling is a rigid bar H, having a handle *h* and a standard I, the upper portion of which is slotted, as indicated by the dotted line *i*, to permit a proper vertical play of the free end of lever J. Below the point where the bar H and standard I are rigidly united to each other a sheave K is journaled in said standard, and below this sheave the standard is forked at *k* to serve as a stop that limits the upward swing of the spout E, at which moment said fork fits around a band or collar L of said spout, as in Fig. 1, although in Fig. 6 this collar is omitted. This collar has a hook *l*, wherewith is engaged one end of a wire rope or chain M, which flexible device after passing around the sheave K is attached to a rod that diverges toward the pipe B, as shown at N N in Fig. 2, other wire ropes or chains *n n* being fastened to said rod. These ropes or chains pass over sheaves *o o* on opposite sides of the pipe B and carry an annular weight O, surrounding said pipe and serving to automatically raise the spout E. Again, this weight is made of two precisely-similar semi-annular sections O O, bolted together, as shown at *o* in Fig. 7, and normally tends to retain the spout in the position shown in Figs. 1, 4, and 6.

P P are braces proceeding from the junction of bar H and standard I and running up to a lug *p* on the head of the column, to which latter the lever J is pivoted at *j*.

R in Figs. 4 and 5 is a central shaft that operates the valve mechanism in the manner described in my patent above referred to.

The operation of this improved water-col-

umn is as follows: Assuming all the parts of said column to be in their normal positions, (shown in Figs. 1, 2, and 4,) it will be apparent that the weight O draws up the spout E until it contacts with the fork *k*, which at once arrests said spout and without causing any sudden jar or concussion, the rods P P′ serving to support the bar H, standard I, and said spout. Again, in this normal position of the column the supply of water is shut off and the ascending main A B is turned around either to the right or left until its spout E is about parallel with the track, so as not to be struck by passing trains. Furthermore, by referring to Fig. 4 it will be noticed there is a clearance G between the male coupling C and female coupling D to admit air and insure the complete drainage of the spout E, which is now inclined, as represented in Fig. 1. When a train arrives at a watering-station where the column is situated, a fireman on the tender can reach over, grasp the handle *k*, and turn the main A B around until the nozzle *e* of spout E is in line with the well-hole of said tender, after which act said spout is depressed, as shown in Fig. 3. Lever J is then pulled down to let on the water, which flows until the tender is filled. By referring to Fig. 5 it will be noticed that the spout when fully depressed does not cause the female coupling D to become disconnected from the male coupling C, and for this reason there is no escape of water at this loose joint. In fact, the clearance G by admitting air facilitates the flow of water down the spout and effectually prevents any back action or regurgitation. As soon as the tender is filled with water the supply is shut off, the spout automatically swung up by the weight O, and the column turned around to its normal position. Finally, in some cases the male coupling C may be integral with the pipe B, and such a construction is to be considered as within the scope of my invention.

I claim as my invention —

1. A water-column comprising a stand-pipe affording an upward watercourse, a coupling part connected thereto and affording a downward return course and a discharge-spout communicating with said coupling, and so coupled thereto as to afford an air-passage between said coupling and said spout as set forth.

2. A water-column B, having a lateral outlet *b*, a downwardly-inclined male coupling C *c*, attached to said column: and a discharge-spout E communicating with said male coupling, and so coupled to said column, or to an attachment thereof, as to afford an air-passage between said male coupling and spout, for the purpose described.

3. The rigid bar H attached to the head of a water-column of the class specified and having the spout movably connected thereto, for the purpose specified.

4. In a water-column, of the class specified, the rigid bar H, standard I, and inclined braces P, P′, for the purpose described.

5. In a water-column, of the class specified, the rigidly-supported standard I, sheaves *b b* K; flexible connections M, *n*, *n*, and counterbalance O, for the purpose described.

6. In a water-column, of the class specified, the rigid bar H carrying a standard I, having a fork *k*, at its lower end, for the purpose described.

In testimony whereof I affix my signature in presence of two witnesses.

JOHN N. POAGE.

Witnesses:

JAMES H. LAYMAN,
JESSE M. SIMON.

No. 633,559. Patented Sept. 26, 1899.

J. B. BARTHOLOMEW.

PNEUMATIC STACKER

Application filed Feb. 1, 1899. Renewed Nov. 18, 1899.

(No Model.) 4 Sheets—Sheet 1.

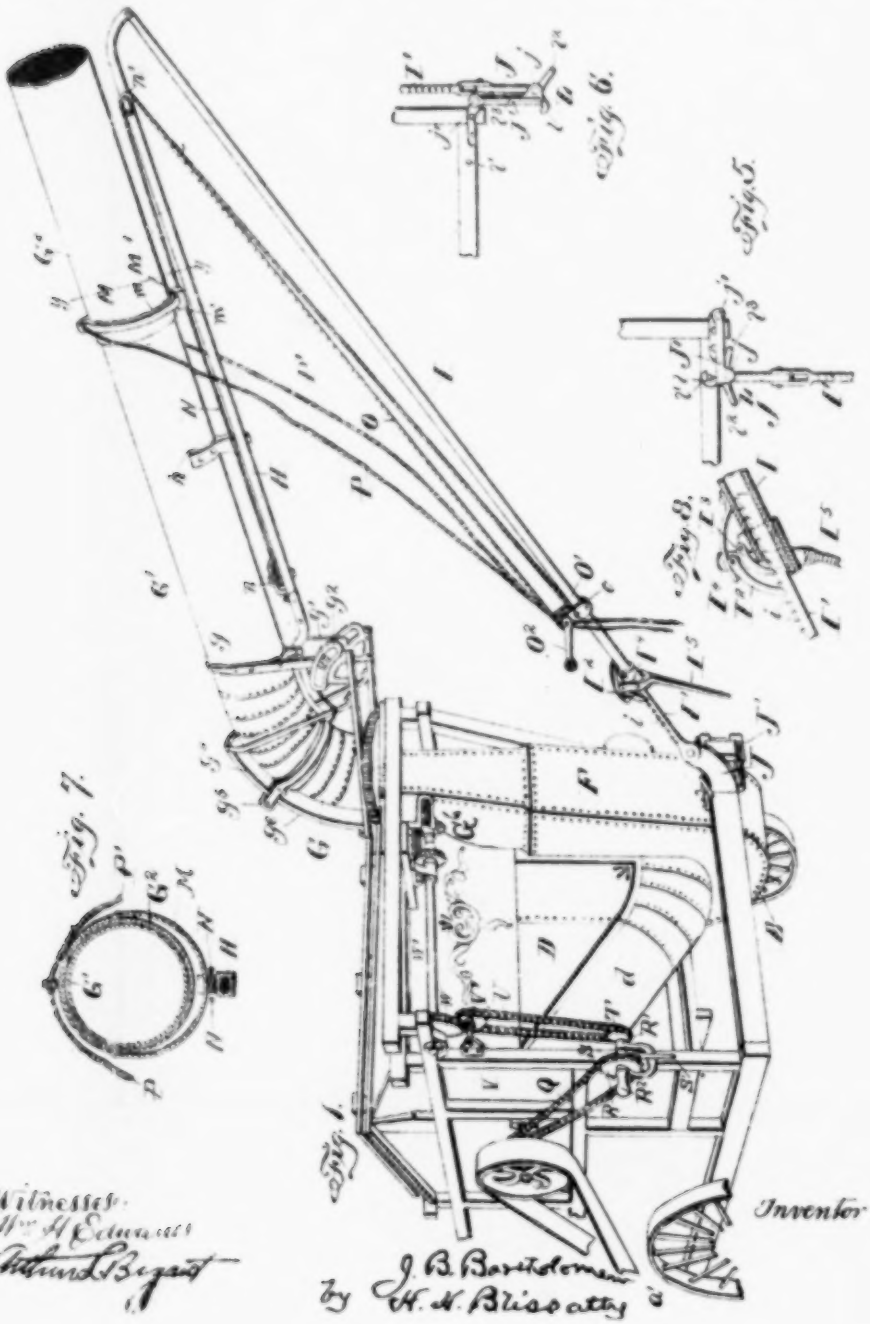

Witnesses:
Wm. H. Edmunds
Arthur L. Bryant

Inventor
J. B. Bartholomew
by H. N. Bliss atty

No. 633,559. Patented Sept. 26, 1899.

J. B. BARTHOLOMEW.

PNEUMATIC STACKER.

(Application filed Feb. 1, 1898. Renewed Nov. 18, 1898.)

(No Model.) 4 Sheets—Sheet 2.

Fig. 2.

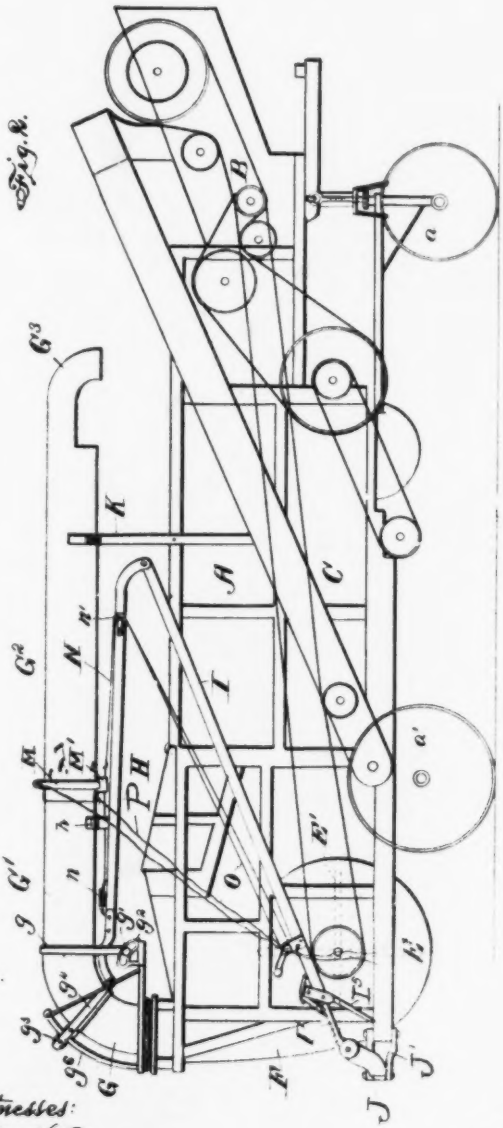

Fig. 4.

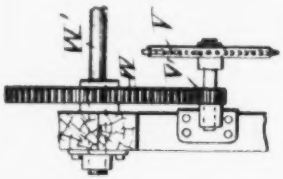

Fig. 3.

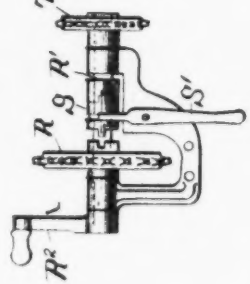

Witnesses:
Wm. H. Edwards.
Arthur L. Bryant

Inventor.
J. B. Bartholomew
by H. H. Bliss
Atty.

No. 633,559. Patented Sept. 26, 1899.

J. B. BARTHOLOMEW.

PNEUMATIC STACKER.

(Application filed Feb. 1, 1898. Renewed Nov. 18, 1898.)

(No Model.) 4 Sheets—Sheet 3.

Fig. 9.

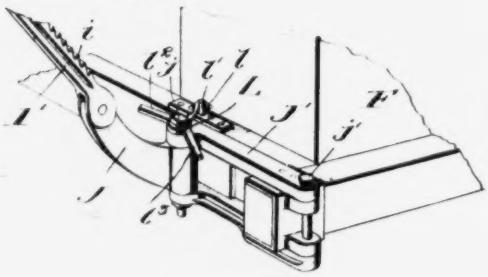

Fig. 11.

Fig. 13.

Fig. 12.

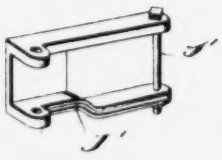

Fig. 10.

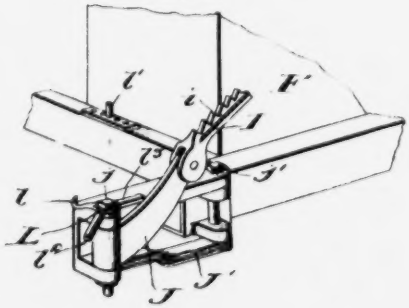

Witnesses:-
L. D. Koerth.
Arthur L. Bryant

Inventor.-
J. B. Bartholomew,
by
H. H. Bliss atty

No. 633,559. Patented Sept. 26, 1899.

J. B. BARTHOLOMEW.

PNEUMATIC STACKER.

Application filed Feb. 1, 1898. Renewed Nov. 18, 1898.)

(No Model.) 4 Sheets—Sheet 4.

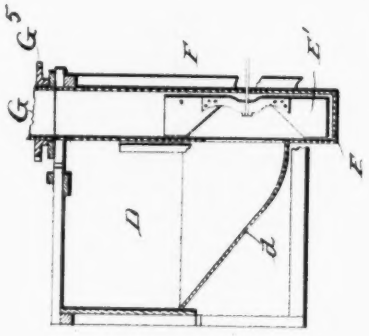

Fig. 15.

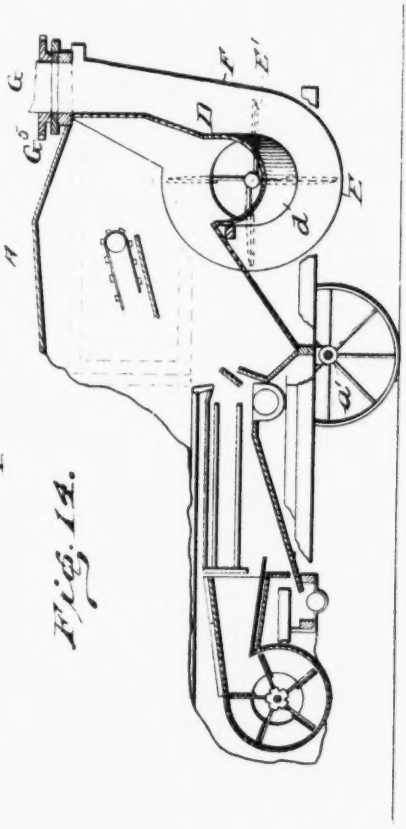

Fig. 14.

Witnesses
C. D. Kesler
C. A. Longfellow.

Inventor
J. B. Bartholomew
by A. H. Bliss
Attorney

UNITED STATES PATENT OFFICE.

JOHN B. BARTHOLOMEW, OF PEORIA, ILLINOIS, ASSIGNOR TO THE AVERY & ROUSE STEAM THRESHER COMPANY, OF SAME PLACE.

PNEUMATIC STACKER.

SPECIFICATION forming part of Letters Patent No. 633,559, dated September 26, 1899.

Application filed February 1, 1896. Renewed November 18, 1898. Serial No. 696,826. (No model.)

To all whom it may concern:

Be it known that I, JOHN B. BARTHOLOMEW, a citizen of the United States, residing at Peoria, in the county of Peoria and State of Illinois, have invented certain new and useful Improvements in Pneumatic Stackers; and I do declare the following to be a full, clear, and exact description of the invention, such as will enable others skilled in the art to which it appertains to make and use the same, reference being had to the accompanying drawings, and to the letters of reference marked thereon, which form a part of this specification.

Figure 1 is a perspective of a sufficient portion of a thresher and straw-stacking mechanism to illustrate the manner of embodying my improvements. Fig. 2 is a side elevation of the entire machine. Fig. 3 shows, detached, some of the devices for driving the shaft which imparts the reciprocating movement to the stacker. Fig. 4 is a view of another portion of said driving mechanism. Fig. 5 is a side view of the parts which constitute the lock for holding the stacker-tube in operative position. Fig. 6 is a similar view of said lock when its parts are in the position occupied at the time the tube is in its inactive position or folded. Fig. 7 is a cross-section of the stacker-tube and attached parts on the line *y y* of Fig. 1. Fig. 8 is a sectional view, on an enlarged scale, of the pawl mechanism for regulating the length of the brace. Fig. 9 is a detail perspective view of the supporting devices for the lower end of the brace, the parts being in the positions occupied when the stacker-tube is in operative position. Fig. 10 is a similar view, the parts being in the positions occupied when the stacker-tube is swung forward. Figs. 11 to 13 are detail views of the members or parts of the said support for the lower end of the brace. Fig. 14 is a longitudinal vertical section of the rear end of the separator-casing shown in Figs. 1 and 2. Fig. 15 is a transverse section of the same.

Inasmuch as the matters constituting more particularly the features or improvement herein can be applied to any of the forms of threshing-machines now well known, it is unnecessary to describe in detail the parts which constitute the thresher proper, although I have herein (in Fig. 2) illustrated more or less conventionally an entire threshing-machine in order that an understanding can be readily had of the relation thereto of the stacking devices.

A indicates the body part of the thresher, it being supported upon front and rear wheels *a a'*. The cylinder is situated in that part of the thresher indicated by B, and the straw is carried from that end of the machine longitudinally through it to the rear end, the winnowing-fan and the vibrating shoe being arranged in a well-known way in that part of the body or casing indicated by C.

The straw, which is finally delivered from the separator, is deposited in the receptacle at D at the rear end of the machine, the latter having a sloping bottom *d*, inclined toward one side of the casing.

E represents a fan-casing the eye of which communicates with the interior of the chamber D. Inside of this fan-casing there is arranged a fan E', which also, as concerns the details of its construction, can be made in any now well-known form.

The straw and chaff chute or guide at D *d* in its relations to the other parts is shown in Figs. 14 and 15. It will be seen that the straw is first deposited in this chute or receptacle D and that it then moves along the bottom thereof, which is inclined downwardly and transversely of the machine, to the ejector-duct for the fan-casing, it, as shown, being on the transverse lines of the eye of the fan and delivering the straw thereto, so that the latter can be carried to the adjustable delivery-duct G above.

Inasmuch as the present invention does not pertain to the details of any particular style of grain-winnower or style of straw-carrier within the separator, it is unnecessary to describe these parts in detail, as they may be of any suitable sort, there being a conventional illustration of such straw-carrier and winnower in Fig. 15. So, too, the rotary movements or horizontal adjustments of the main pneumatic delivery-ducts G G' G^2 can be effected by any suitable gearing or other devices such as now well known. A common mechanism for this purpose is more or less conventionally illustrated in the drawings, there being at G^5 a toothed ring or gear-wheel at the lower part of the delivery-duct, driven

by gearing supplied with reversing devices, (shown generally at G^6.)

The delivery-duct leading out from the fan is indicated by F, it extending to a plane at or near the plane of the top or roof of the casing. Upon said roof there is arranged a vibrating support to carry a wind-trunk, which communicates with the aforesaid duct F through an intermediate joint-piece.

In an earlier application, Serial No. 550,986, filed by me on the 28th day of May, 1895, I have shown and described a pneumatic straw-stacking mechanism which as concerns a number of the features of the arrangement and details of construction is more or less similar to that herein and to which reference may be made for a fuller understanding of said details; but my experience with the construction of the earlier sort has led me to a number of my improvements which I have herein shown and will describe.

G indicates the hood or lower section of the trunk, through which the wind, straw, chaff, &c., are ejected.

G′ indicates the inner longer duct-section. At the lower end it is so connected to the section G that it can be moved vertically without impairing the substantially air-tight joint with such part G.

G^2 indicates a third or outer duct-section telescopically connected to the section G′ and adapted to both slide longitudinally thereon and also to be axially rotated more or less. At its outer end it has a segmental head-like portion G^3, which can be either advanced or withdrawn or can be turned around the longitudinal axis of the duct for a purpose to be described.

At the lower end the part G′ is connected to the vibrating support or framework in substantially the manner described in my said earlier application—that is to say, it has yokes or bracket-arms at g, which at their lower ends are provided with rollers g', fitted in guides g^2, having curvilinear slots. In addition to these it is provided with a supporting-yoke g^4, which carries rollers g^5, that engage with the curved guide g^6 behind the air-duct and rigidly secured to the vibrating frame.

H is a bracing-bar lying below and approximately parallel to the parts G′ and G^2. At its rear end it is rigidly secured to the frame part above described, preferably near the bracket-strap g, and at a point as far outward as possible it is connected by a bracket or strut h to the tube-section G′. At its outer end it is pivotally connected to an inclined brace having the parts I and I′.

The part I is tubular and adapted to receive the lower part I′, the latter being a ratcheted rod which can move longitudinally into the tube, the ratchet-teeth being shown at i.

I^2 I^3 are dogs adapted to engage with the teeth i. The dog I^2 is pivoted to the vibrating yoke I^4, and the dog I^3 is secured by a stationary pivot.

The yoke I^4 carries a lever I^5, by means of which the operator can at any time impart a step-by-step movement longitudinally to the part I of the brace, so as to throw upward the bar H and the parts secured thereto. The dogs I^2 and I^3 mutually act to prevent any retraction of the part I when the lever I^5 is being moved.

The brace I I′ is at the lower end pivotally connected to the swinging support or hinge-like plate J. Said support J is pivoted at j to a supplemental hinge-plate or swinging carrier J′, and the latter is pivoted to the framework of the machine at j'.

On examining Fig. 6 it will be seen that the parts last described can be turned into such position as to permit the brace I I′ to swing around to the side of the machine and lie in a vertical plane substantially parallel to the machine, this being necessary when the stacker-tube is to be put in its inactive position and lowered for transportation. At such time it rests upon a pillow or support K near the front end of the thresher, as shown in Fig. 2.

By examining Fig. 5 it will also be seen that the pivots at jj' are so related that the brace I I′ can be moved around behind the machine, so as to lie in another vertical plane parallel to the longitudinal planes of the machine. To hold it in this latter position, I employ a lock which acts automatically. This is indicated as a whole by L. It is formed of a plate or bar having a hook l, adapted to engage with a pin or stud l' on the framework. It is also formed with two levers or trip-arms l^2 l^3 and is pivoted to the plate J′ at the point j. The trip-arms l^2 l^3 lie in the path of the swinging plate or bar J. When the stacker-tube is being swung around from the inactive position (shown in Fig. 2) to the position of operation, the plates J′ and J move around the pivots at j' and j until finally the plate J bears against the trip-arm l^2 and compels the hook l to firmly engage with the pin l'. When the machine is in operation and the stacker-tube is being vibrated from side to side in the ordinary manner, it is stopped by the reversing mechanism at either limit of its movement before the plate J can impinge upon the trip-arms l^2 l^3; but when it is desired to fold the parts around in the inactive position again the plate J is carried far enough to strike the trip-arm l^3, which automatically releases the hook l from the pin l', and thereupon the plates J and J′ are freed to rotate far enough to allow the brace-rod I I′ to swing around to the side of the separator. In brief, the brace-rod automatically locks itself in working position and automatically releases itself from the locked position.

The axis of the pivot at j should be on the axial line of the toothed ring or vibrating mechanism at the base of the straw-tube. The sliding section G^2 of the straw-tube is moved or telescoped in relation to the section G′ as follows:

M is a ring or band extending partly or entirely around the sliding section G^2.

M' is a block or rope attachment loosely engaging with the ring or band M. They may be loosely joined by having a flange *m* formed on or secured to the ring and having engaging lips or flanges *m'* on the block or attachment M'.

N is a rope or cable extending from a sheave *n* on the bar I to the sheaves *n'* near the outer end of the bar. The ends of the cable are connected to the ends of a chain O, which extends downward to and around and engages with a sprocket O', mounted in a bracket *o*, secured to the brace-bar I and having a crank O^2. The chain and rope or cable together constitute an endless flexible device. One side or strand of the cable is secured to the above-described block or attachment-piece M'. It will be seen that if the crank O^2 be turned in one direction the draft will be exerted on the sliding tube-section in such way as to cause it to move out on the tube-section G' and that if the crank is turned oppositely said tube-section will be drawn in. In this way the total length of the air and straw duct can be readily adjusted.

The end piece or head G^3 of the duct being integral or solid with the telescoping part G^2, I provide for rotating both these parts G^2 and G^3 in order to guide or deflect the straw to the right or the left horizontally.

P P' indicate one or more ropes. The part P is secured to the top of the aforesaid band or ring M and extends down on the right-hand side of the straw-tube. The part P' extends down from the top of the ring on the left-hand side of the tube. The lower ends of the rope or ropes are temporarily supported in any suitable manner. When it is desired to direct the escaping straw toward the right, a pull is exerted upon the left-hand rope P', which rocks or turns the telescoping part G^2 of the tube in the proper manner to effect this. When it is desired to turn the straw to the left, downward draft is exerted upon the other rope P.

It is sometimes desirable to throw the oscillating mechanism which vibrates the duct out of action even when the vibrator and separator continue in motion.

Q is the drive-chain, which brings power from a suitable sprocket to the sprocket R on the shaft R' at the rear of the machine. This shaft is also provided with a sprocket T, a clutch S, and a crank R^2. The power-receiving wheel R is loose on the shaft.

U is a chain extending from the sprocket T to the sprocket-wheel V. The latter rotates a pinion V', which engages with a spur-wheel W on the shaft W', the latter being connected to the gearing forming the principal part of the oscillating devices. These devices may be substantially similar to those in my aforesaid earlier application and need not be here described in detail.

Whenever it is desired to disengage the stacker mechanism from the thresher and separator, it can be readily done by moving the lever S', which throws the clutch S out of engagement with the wheel R. While so held out the operator by hand can actuate the crank R^2 in such way as to swing the straw-tube to the right or the left, as desired, and to whatever extent is wished.

It will be seen that with the stacking mechanism illustrated and above described but a single operator is required at the rear end of the machine and that he can accomplish all of the necessary adjustments and manipulations while standing upon the ground, whether it be the elongating or shortening of the straw-duct by the crank O^2 or the elevating or lowering of the tube by the lever I^3, or the guiding to the right or to the left of the escaping straw by the ropes P P' or the throwing out of action of the oscillator by the clutch S' and the turning of the duct to one side or the other by the crank R^2. Thus I avoid the necessity of having an operator upon the top of the machine or in an elevated position, as has been required with many of the earlier styles of construction.

It will be seen that the duct of trunk is supported by devices of the nature of a crane, the important members of which are below the trunk, these being a bar or bars supplemental to the trunk and stationary relatively to the inner section thereof, although vibratable and adjustable therewith, and a downward and inclined brace, which is also stationary with respect to the inner section of the trunk, but vibratable therewith, it constituting the extension member of the support.

A pneumatic stacker having the features of construction which I have herein presented is superior to others with which I am acquainted, not only in giving the strong and effective vertical support due to this under brace or bar, but also because I can remove from above the trunk all of the upwardly-projecting parts employed in earlier constructions which have prevented the machine from being taken into barns or other places where obstructions were present. When the trunk is in the horizontal position, the downward force at the outer end is at its maximum, and this decreases as the trunk is carried toward the vertical. With an under brace of the sort herein shown the parts can be so arranged, without increasing the height of the entire mechanism, that the angle of the brace at its outer end shall be such that it can easily take the entire downward thrust in whatsoever position the trunk may be adjusted vertically.

I am aware of the fact that braces have been employed in connection with the frames of endless belts used for various purposes, including the carrying of straw; but I believe myself to be the first to have devised a pneumatic stacker and an under brace therefor—to wit, a brace extending downward and

backward from a point relatively near the outer end of the inner trunk-section—and both so arranged that they can be readily applied to the rear end of a thresher in such way as to dispense with the numerous parts and complicated mechanisms and the supplemental supporting devices which have been heretofore required when brace-supported endless-belt stackers were used.

What I claim is—

1. In a threshing and straw-stacking mechanism, the combination of a main frame and casing, a straw-separating mechanism and a grain-winnowing mechanism in said frame and casing, a straw-receptacle in said casing, a rotary support or base mounted on said casing, a duct from the ejector, a delivery-trunk resting upon said frame and connected to said rotary support and adapted to be turned either rearward from the casing or forward above it, and a brace having its outer end arranged to support the trunk at points relatively near its outer end and inclined downward and inward, and having its inner end arranged to vibrate around the vertical axis of the rotary support, substantially as described.

2. In a pneumatic straw-stacker, the combination of the forcing mechanism for air and straw, the delivery-trunk, the horizontally-vibratable support for the delivery-trunk, a brace connected with the trunk, and a laterally-adjustable support for the brace arranged below the aforesaid support for the delivery-trunk, substantially as set forth.

3. In a pneumatic straw-stacker, the combination of the forcing mechanism for air and straw, the delivery-trunk, the horizontally-vibratable support for the delivery-trunk, a brace for supporting the outer end of the delivery-trunk, and an adjustable support for said brace independent of and disconnected from the said horizontally-vibratable trunk-support, and adapted to support the said brace in line with the axis of the said trunk-support and in a position out of line with said axis, substantially as set forth.

4. The combination, with a supporting-frame having a substantially inclosed chamber, a rotary fan or ejector mounted within said chamber, a duct extending upward from said chamber, the horizontally-vibratable ring or plate mounted above said chamber, the delivery-trunk mounted on said ring, or plate, and adapted to be turned from a position in which its discharge end is in rear of the said chamber to a position in which its discharge end is in front of the rear wall of said chamber, the brace for supporting the projecting portion of the trunk, and a pivotally-mounted support for the inner end of the brace, said support being independent of the vibratable ring or plate and adapted to maintain said inner end of the brace at a point in line with the axis of said ring or plate and also at a point out of said axial line, substantially as and for the purpose set forth.

5. The combination, with a threshing and separating mechanism and the casing therefor, of the straw-ejector casing, the fan or ejector therein, the upward-delivering stationary duct communicating with the ejector-casing, the vertically-adjustable delivery-trunk supported to rotate about a vertical axis passing down through said stationary duct, said delivery-trunk being adapted to receive material from said stationary duct, and a brace extending downwardly from and adapted to support the delivery-trunk and having its lower end arranged to vibrate around the aforesaid vertical axis, substantially as set forth.

6. The combination, with a threshing and separating mechanism, the casing therefor, and the ejector-casing secured to the separator-casing and communicating therewith, of the rotary fan or straw-ejector mounted within the said ejector-casing, the stationary duct for carrying straw upward from the ejector, the vertically-vibratable delivery-trunk having a downward-extending mouth at its lower end through which the straw from said stationary duct is received, a horizontally-rotatable support for said trunk mounted around the upward-extending stationary duct, the brace or depending support for the outer end of the delivery-trunk having its lower end arranged to vibrate around the vertical axis of the delivery-trunk, and the support for the lower end of said brace situated below the stationary straw-duct and outside thereof, substantially as set forth.

7. In a pneumatic straw-stacker, the combination, of the vertically-vibratable straw-delivery duct, a relatively stationary straw-duct below the delivery-duct and through which the straw passes upward to the lower end of the delivery-duct, a substantially horizontally mounted centrally-open rotating mechanism connected to the delivery-duct and surrounding the upper end of said stationary duct, and a brace, for the outer part of the delivery-duct, inclined inward and forward to a support below, and independent of, the said centrally-open rotating mechanism and said brace having its lower end adapted to vibrate substantially concentric with the said rotating mechanism, substantially as set forth.

8. In a pneumatic straw-stacker, the combination, of the vertically-adjustable horizontally-vibrating straw-delivery duct, the straw-ejector, the duct extending from the ejector upward to the adjustable delivery-duct, the brace for the outer end of the delivery-duct having its inner end arranged to vibrate, and a movable carrier independent of the main straw-duct for the brace, and means for fastening said carrier in either of two or more positions, substantially set forth.

9. The combination with the threshing and separating mechanism, of the straw-ejector casing secured to the separator-casing, the fan or ejector therein, the upward-delivering stationary straw-duct, communicating with

the ejector-casing, the vertically-adjustable delivery-duct receiving material from and rotating around a vertical axis passing through said stationary duct, the brace for the outer end of the delivery-duct having its lower end arranged to vibrate a movable carrier for said lower end of the brace, and means for fastening said carrier in either of two or more positions, substantially as set forth.

10. The combination, with a threshing and separating mechanism and its casing, of the straw-ejector casing secured to the separator-casing, the fan or ejector therein, the upward-delivering stationary straw-duct communicating with the ejector-casing, the vertically-adjustable delivery-duct receiving material from and rotating around a vertical axis passing through said stationary duct, and the brace for the outer end of the delivery-duct having its lower end arranged to move around the vertical axis of the delivery-trunk, and a carrier movable independently of said trunk for supporting the lower end of the brace, substantially as set forth.

11. In a threshing and separating mechanism, the combination, with the main frame, a fan mounted within a chamber in the frame, and a horizontally-rotatable trunk or spout communicating at one end with the fan-chamber, of a brace having one end connected to the trunk and its outer end connected to a horizontally-rotatable pivot, and means for holding said pivot at the axis of the horizontal movement of the trunk or in a position at one side thereof, whereby the brace will support the trunk whether the same be in working position or swung forward over the main frame, substantially as set forth.

12. In a threshing and separating mechanism, the combination of a supporting-frame, a stacker-spout mounted on a rotatable plate whereby it can be caused to extend rearwardly from the supporting-frame or forward over the same, and a brace connected at one end to said spout and having its other end pivotally connected to the frame whereby it is adapted to support the spout both when the spout extends rearwardly from the supporting-frame and when it extends forward over such frame, substantially as set forth.

13. In a pneumatic straw-stacker, the combination of the supporting-frame, the vertically-adjustable straw-duct above said frame, the brace-rod extending downward and inward from said duct, the hinge at the lower end of the brace, and the swinging carrier for the hinge supported independently of the devices which support the straw-duct.

14. In a pneumatic straw-stacker, the combination of the main supporting-frame, the straw-duct within the frame, the vertically-adjustable straw-duct above the frame, the extensible brace extending downward from the straw-duct, and a lever connected with the brace for throwing its upper end to different vertical positions, substantially as set forth.

15. In a pneumatic straw-stacker, the combination of the frame, the straw-duct therein, the vertically-adjustable straw-duct communicating with the aforesaid duct, the brace extending downward from the adjustable duct and formed in two telescoping parts, the lower of which is supported by a hinge or pivot permitting horizontal vibration of the brace, and means substantially as described engaging with both the parts of the brace and adapted to positively separate them for elongating the brace, substantially as set forth.

16. In a pneumatic straw-stacker, the combination of the supporting-frame, the straw-duct therein, the fan for causing an air-draft through said duct, the vertically-adjustable straw-duct outside of the frame and communicating with the duct therein, the bar or frame connected to and situated by the side of the vertically-adjustable duct, the brace extending downward from and connected to the said bar or frame, and the support for the lower end of the brace adapted to permit a horizontal vibration of the brace, substantially as set forth.

17. In a pneumatic straw-stacker, the combination with the vertically-adjustable straw-duct having an inner section and an outer section movable longitudinally along the inner section, of a bar or frame secured to the inner section and extending outward to points beyond the inner end of the outer section, a brace below the straw-duct having its upper end secured to said bar or frame at a point outside of the inner end of the outer duct-section, and a support for the lower end of the brace permitting horizontal oscillation, substantially as set forth.

18. In a pneumatic straw-stacker, the combination of the vertically-adjustable straw-delivery tube, having an inner section and an outer longitudinally-movable section, the bar H, the strut or connecting piece *h* between said bar and the inner section, said bar extending beyond the inner end of the outer section, the brace extending downward from the said bar and supported by a hinge at its lower end, and means for moving the outer section longitudinally, substantially as set forth.

19. In a pneumatic straw-stacker, the combination of the main frame, the straw-duct therein, the fan for causing an air-blast through said duct, the vertically-adjustable straw-duct outside of the frame and communicating with the duct therein, the downward and inward inclined brace connected at its upper end to the adjustable duct, a hinge for the lower end of said brace, the swinging carrier for said hinge, and the lock for said carrier, substantially as set forth.

20. In a pneumatic straw-stacker, the combination of the vertically-adjustable straw-duct, the fan for causing a blast of air through said duct, the brace connected at its upper end to said duct and extending downward

and inward, the hinge for the lower end of said brace, adapted to allow it to swing vertically, and the supplemental hinge or swinging carrier connected with the brace to allow it to swing horizontally, substantially as set forth.

21. In a pneumatic straw-stacker, the combination of the vertically-adjustable straw-duct, the fan for causing a blast of air through said duct, the latter being made of an inner section and a longitudinally-movable outer section, a brace extending downward from the duct, the hinge for the lower end of said brace, and means for moving longitudinally the outer section of the straw-duct, substantially as set forth.

22. In a pneumatic straw-stacker, the combination of the ejector, the vertically-adjustable and horizontally-vibratable delivery-duct for straw and air from the ejector having an inner section and an outer section longitudinally adjustable on the inner section, a supplemental frame for supporting said duct-sections, said frame having one or more standards or levers g, g^4, which are stationary relatively to the inner duct-section, and a bar extending from the said standards or levers forward along the duct, a brace for supporting the outer end of the said forward-projecting bar, and extending therefrom downward and inward, and means for pivotally supporting the lower inner end of the brace to permit it to vibrate with the delivery-duct, substantially as set forth.

23. In a pneumatic stacker, the combination with the vertically-adjustable, horizontally-vibrating delivery-duct, having an inner section and an outer section longitudinally adjustable on the inner section, of a frame having two standards or levers g, g^4, inclined to each other and stationary relative to the inner duct-section, a bar extending forward from said levers or standards, a downward and backward inclined brace, means for connecting the outer end of the brace to the forward-extending bar, and means for pivotally supporting the inner end of the brace, whereby, though stationary relative to the inner section of the duct, it can be horizontally vibrated, substantially as set forth.

24. In a pneumatic stacker, the combination with the vertically-adjustable, laterally-vibratable duct, formed with an inner section, and an outer longitudinally-adjustable section, of a ring secured to the inner duct-section, a bar connected to and extending forward from the said ring, a downward and backward inclined brace, means for connecting the brace to the said bar, said brace being horizontally vibratable with the trunk, a flexible power mechanism having wheels supported on the frame formed by the aforesaid parts, and having a chain or cord mounted on said wheels, and means for connecting the said chain or cord to the outer sliding duct-section, substantially as set forth.

25. In a pneumatic stacker, the combination with the vertically-adjustable, laterally-vibratable trunk, having an inner duct-section and an outer duct-section sliding longitudinally on the inner section, a rotary base connected with the inner section, a standard or lever pivotally connected to the rotary base and stationary relative to the inner duct-section, a bar extending forward along the side of the duct, and having a pivotal connection between its inner end and the rotary base, a chain or cord directly below the duct and connected to the outer sliding duct-section for adjusting it longitudinally, and means for exerting an upwardly-acting force upon the outer end of the said bar for vertically adjusting the duct, substantially as set forth.

26. In a pneumatic stacker, the combination of the ejector mechanism, the rotary base, the delivery-duct having an inner section and an outer section longitudinally adjustable on the inner section, a frame connected with the rotary base and extending forward along the side of the delivery-duct, and a downward and inward inclined brace connected to the said frame at its outer end, and having its inner end supported independently of the rotary base, and adapted to vibrate horizontally in unison with the duct, substantially as set forth.

27. In a pneumatic stacker, the combination of an ejector mechanism, a rotary base or support, a delivery trunk or duct mounted on the rotary base and consisting of an inner section and an outer section telescopically connected to the inner section, a supplemental supporting-frame having one member extending parallel to the duct and its other member inclined downwardly and rearwardly, both said members being mounted to vibrate around the axis of the rotary base or support, means on said frame for adjusting the outer duct-section longitudinally, and means for varying the length of the inclined member of said supplemental frame, substantially as set forth.

28. In a pneumatic straw-stacker, the combination with a straw-duct consisting of an inner and an outer section telescopically connected together, of a ring secured to the outer duct-section, a guiding arm or bar arranged parallel to the straw-duct, a block adapted to engage with the ring on the outer duct-section, means mounted on said arm or bar and adapted to move said block and outer duct-section longitudinally, and independent means connected with said ring for rotating said outer duct-section, substantially as set forth.

29. In a pneumatic straw-stacker, the combination with a straw-duct consisting of an inner section and an outer section telescopically connected together, of a ring secured to the outer section of said duct, a guiding-arm extending parallel to the stacker-tube, a block loosely engaging with the ring on the outer stacker-section, means for moving said block and thereby the outer duct-section longitudi-

nally, and cords or cables connected with said ring on the outer duct-section and extending on opposite sides of such duct, whereby said outer section can be rotated about the inner section, substantially as set forth.

30. In a pneumatic stacker, the combination, with a stacker-tube having an inner section and an outer section telescopically connected together, of a brace for such tube consisting of the arm or member II, extending parallel to the tube, and the member I extending downwardly from the outer end of the said member II, an endless cord or cable passing around guide-wheels on the member II of the brace, and connected with a shaft journaled on the other member I of the brace, a block or guide-piece connected with one side of said cable and loosely engaging with a projection on the outer section of the stacker-tube, and independent cords or cables connected with said outer tube-section and extending on opposite sides thereof, substantially as and for the purpose set forth.

31. In a pneumatic stacker, the combination of a supporting-frame, a straw-delivery duct mounted on a rotatable carrier on said frame, a brace-rod extending downward and inward from said duct and having its lower end connected with a carrier pivoted on the frame, a lock for holding said carrier stationary, and means adapted to be actuated by the brace for releasing said lock, substantially as set forth.

32. In a pneumatic stacker, the combination of a supporting-frame, a straw-delivery duct mounted on a rotatable carrier on said frame, a brace extending downward and inward from said duct and having its lower end connected with a carrier pivoted to the frame, a lock-hook carried by said carrier and adapted to engage with a stationary stud on the frame, and a trip or lock releasing-finger connected with said lock and extending into the path of the brace, substantially as set forth.

33. In a pneumatic straw-stacker, the combination of a supporting-frame, a straw-delivery tube or duct mounted on a rotatable carrier on said frame, a brace extending downward and inward from said duct, and having its lower end connected to a swinging carrier by a hinge permitting horizontal vibration of the brace, a lock for connecting the swinging carrier to the frame to hold said hinge-joint of the brace at the axis of the rotatable carrier of the straw-duct, and means for releasing said lock adapted to be actuated from the brace, substantially as set forth.

34. The combination, with a threshing-machine, of a straw-receptacle D arranged at the rear of and adapted to receive material from the thresher, an upward-extending stationary duct communicating with said chamber or straw-receptacle, a pneumatic ejector adapted to force material from said receptacle through said duct, a vertically and horizontally adjustable delivery-duct, communicating with the aforesaid duct, and means for adjusting said delivery-duct, both vertically and horizontally, having actuating devices extending to points below the top of the threshing-machine, and accessible to an operator while standing on the ground, substantially as set forth.

35. The combination with a threshing and separating mechanism, of a straw-receptacle in rear of the separating devices, an upward-extending duct communicating with said straw-receptacle, a pneumatic ejector adapted to force straw from said receptacle through said duct, a longitudinally-extensible delivery-duct mounted on the separator-casing to rotate about the mouth of said upward extending duct, a support for said delivery-duct extending downward therefrom, means accessible to an operator while standing on the ground for varying the length of said support to adjust the delivery-duct vertically, and means having controlling devices accessible to an operator while standing on the ground for varying the length of said delivery-duct, substantially as set forth.

36. In a pneumatic stacker, the combination of a delivery-duct consisting of two sections telescopically connected together, a support for said duct extending downward therefrom, means for varying the length of said support to adjust the discharge end of the delivery-duct vertically, means for adjusting the outer duct-section longitudinally of the inner duct-section, and means for rotating said outer duct-section axially, all of said adjusting mechanisms having controlling devices accessible to a single operator while standing on the ground, substantially as set forth.

37. The combination, with a threshing-machine, of a stationary upwardly-extending duct at the rear and adjacent to the plane of one of the longitudinal side walls of the thresher, a straw-receptacle, D, arranged at the rear end of the thresher and having its bottom inclined downwardly transversely of the machine toward the lower end of said stationary duct, a blast-fan mounted within a casing arranged in line, longitudinally, with said duct and communicating therewith, and with the aforesaid straw-receptacle D, and an adjustable delivery-duct communicating with and adapted to receive material from the upper end of the said stationary duct, substantially as set forth.

38. The combination with a threshing-machine, of a stationary upwardly-extending duct, F, a straw-receptacle, D, arranged in rear of the thresher in front and at one side of said duct, F, and having its bottom inclined downwardly on lines transverse of the machine toward said duct, a fan-casing arranged in line with said duct and communicating with the lower ends of said receptacle and duct, a fan within said casing, and an adjustable delivery-duct adapted to receive material from the said duct, F, substantially as set forth.

39. The combination with a threshing-machine, of a straw-receptacle, D, arranged at

the rear end of and having its bottom inclined on lines transverse of the machine and extending from one of the side walls of the thresher to, or substantially to the line of the opposite side wall, an upwardly-extending stationary duct, F, arranged in rear of the lower end of said receptacle, a fan-casing communicating with the lower end of said receptacle and duct and extending to points below the said receptacle, a fan within said casing, and an adjustable delivery-duct arranged to receive material from said stationary duct, substantially as set forth.

In testimony whereof I affix my signature in presence of two witnesses.

JOHN B. BARTHOLOMEW.

Witnesses:
GEORGE F. CARSON,
ELVAN M. VOORHEES.

No. 798,406. PATENTED AUG. 29, 1905.

F. M. FOSTER.

WATER COLUMN.

APPLICATION FILED JAN. 23, 1904.

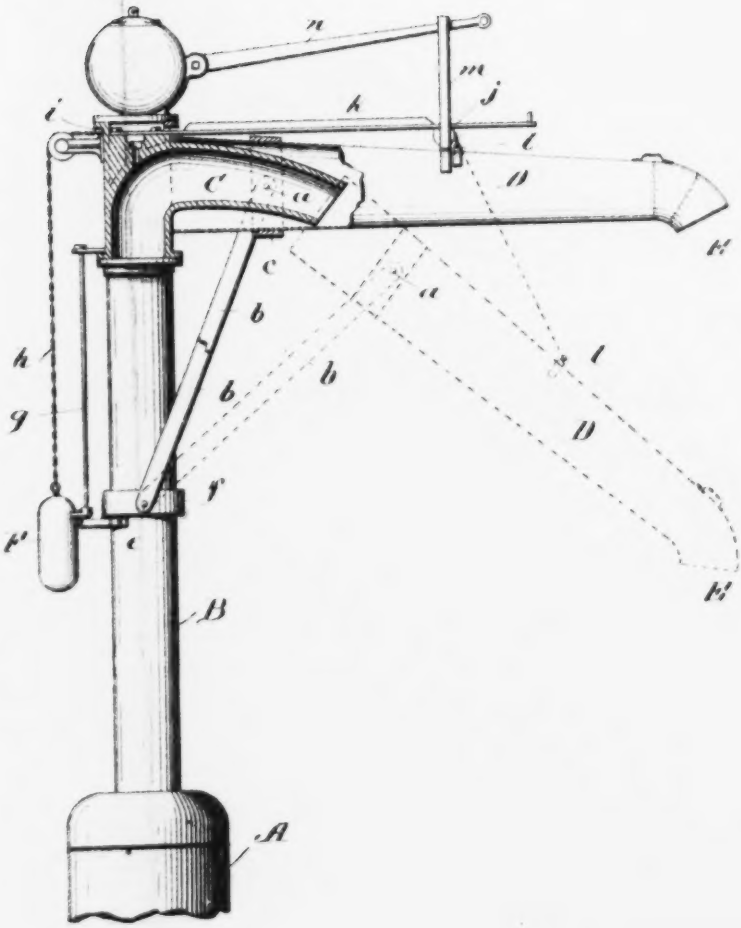

Witnesses.

Edward Peck

Inventor

Frank M. Foster

by Charles Peck

his Attorney.

UNITED STATES PATENT OFFICE.

FRANK M. FOSTER, OF CINCINNATI, OHIO, ASSIGNOR TO THE AMERICAN VALVE & METER COMPANY, OF CINCINNATI, OHIO, A CORPORATION OF WEST VIRGINIA.

WATER-COLUMN.

No. 799,406. Specification of Letters Patent. Patented Aug. 29, 1905.

Application filed January 23, 1904. Serial No. 190,313.

To all whom it may concern:

Be it known that I, FRANK M. FOSTER, a citizen of the United States, residing at Cincinnati, in the county of Hamilton and State of Ohio, have invented certain new and useful Improvements in Water-Columns, of which the following is a full, clear, and exact description, reference being had to the accompanying drawings, forming part of this specification.

My invention relates to that class of water-columns which have a loose-jointed connection between the delivery-spout which conveys the water into the tender-tank of a locomotive and a projecting curved spout extending from the head of the stand-pipe of the column, the delivery-spout being so coupled to the curved spout and supported by the stand-pipe that it can swing with its delivery end practically in a vertical plane from its highest to its lowest position, thus accommodating it to tenders of different height and giving it a wide range of action.

The novelty of my invention will be hereinafter more fully set forth, and specifically pointed out in the claims.

In the accompanying drawing the figure represents in side elevation a water-column partly in section, or rather so much thereof as is necessary to illustrate my invention.

From the base A of the stand-pipe extends upward the continuation of the column B, having suitably secured at its top a laterally and downwardly projecting coupling-nozzle C, over which is loosely fitted the final discharge-pipe D with the usual outer curved downward end E. This discharge-pipe D has pivoted to it, as at *a*, on each side near its inner end a link *b*, said link being preferably pivoted to a collar or band *c*, surrounding the pipe D. The lower ends of the links *b* are pivoted, as at *c*, to the column B and preferably to a band or collar *f*, surrounding the column, and said band is preferably adjustable on the column up or down, as desired, and is secured rigid to the column in its adjusted positions.

The pipe D is counterbalanced by a weight F, in this instance guided on a rod *g*, secured to brackets projecting from the column B, and has secured to its upper end a chain *h*, which passes up over a guide-pulley *i*, journaled in brackets projecting from the head of the spout C. From the pulley *i* the chain extends horizontally over another guide-pulley *j*, journaled to a bracket-frame *k*, secured to and projecting from the head of the column over the spout D, the pulley being located at or near the middle of the spout and the end of the chain being connected to the spout, as at *l*. Also secured to the bracket-frame *k* is a vertical standard *m*, whose lower end is forked and straddles the spout D to limit its upward movement, and said standard also serves as a guide for the lever *n*, which actuates the valve mechanism (not shown) at the base of the column, which forms no part of my present invention and may be of any suitable construction. When the spout is up and entirely out of the way of passing trains, as seen by the solid lines in the figure, its inner end completely envelops the nozzle C and rests against the head of the stand-pipe; but when it is desired to supply a tender-tank with water the spout D is pulled down, swinging on the pivoted links *b* to the position indicated by the dotted lines in the figure, when the discharge end of the pipe D will enter the manhole of the tank, and then the water is turned on. In the figure the two extreme positions of the pipe D are shown, and it will be observed that in the extreme low position the inner end of the pipe D will not be entirely withdrawn from the outer end of the nozzle C, so that there will be no wasting of water whatever and there will be free access of air to the interior of the upper end of the pipe D, thus insuring a perfectly free flow of water through the pipe D. Of course the pipe D will only be lowered sufficiently to suit the height of the particular tank to be filled, and it will be observed that a large range of movement is obtained for this purpose without taking the discharge end E of the pipe D out of a vertical plane parallel with the track, so that in whatever position of elevation it may be it will always come over the filling-hole of the tank.

The water-column is so constructed that it may be swung to carry the delivery-pipe entirely to either side and off the track, as is common in this class of water-columns.

Having thus fully described my invention, I claim—

1. In a water-column of the character described, the combination of a revoluble stand-pipe, an extended discharge-nozzle secured at the head thereof, a discharge-pipe whose in-

ner end is united loosely and telescopically with said discharge-nozzle so as to be moved freely thereon, a pivoted link connection uniting said discharge-pipe near its inner end with the stand-pipe of the water-column, and means for counterbalancing the discharge-pipe, whereby said discharge-pipe may be raised or lowered always in a vertical plane, no matter at what angle it may occupy to the track substantially as described.

2. In a water-column of the character described, the combination of a stand-pipe, an extended downwardly-curved discharge-nozzle secured at the head thereof, a discharge-pipe, whose inner end is united loosely and telescopically with said discharge-nozzle so as to be moved freely thereon, pivoted links whose upper ends are pivoted to a band surrounding the discharge-pipe near its inner end and whose lower ends are pivoted to a band adjustably secured upon the stand-pipe at a distance below the lower end of the discharge-nozzle, and means for counterbalancing the discharge-pipe, substantially as described.

FRANK M. FOSTER.

Witnesses:
EDWARD PECK,
EDWARD SUSSDORF.

No. 818,968. PATENTED APR. 24, 1906.

E. E. JOHNSON.

RAILWAY WATER COLUMN.

APPLICATION FILED FEB. 29, 1904.

4 SHEETS—SHEET 1.

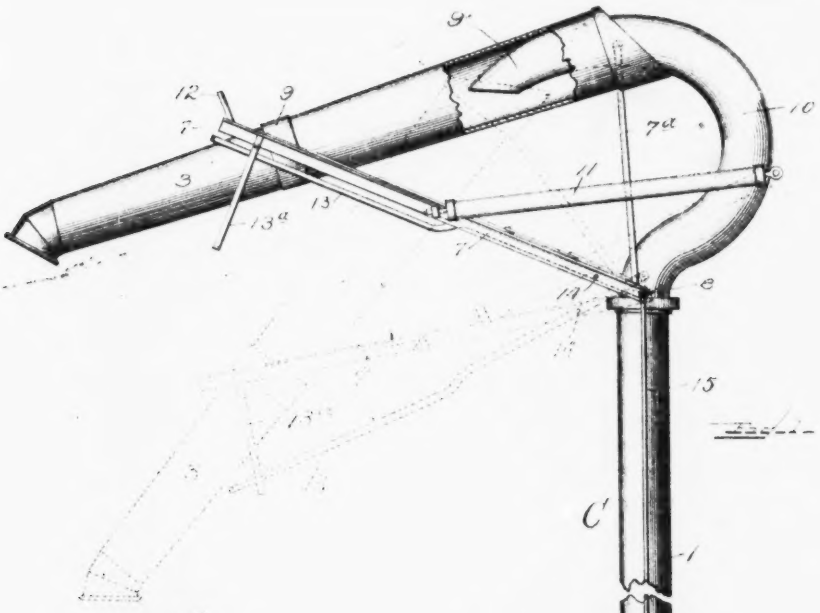

Fig. 1.

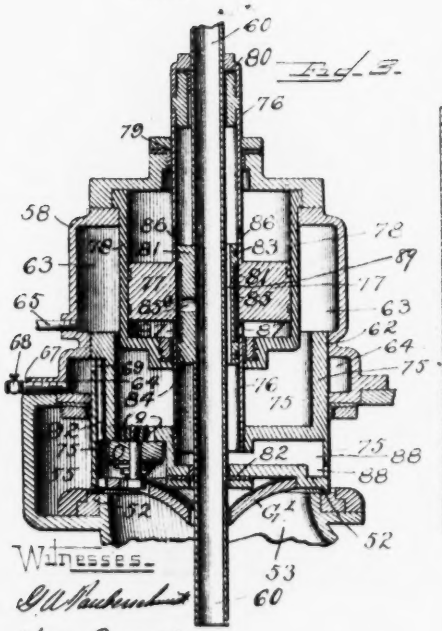

Fig. 3.

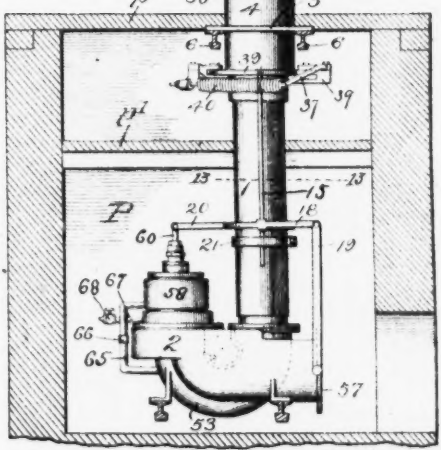

Witnesses.

G. A. Packard

K. A. Estelle

Inventor.

Edw. E. Johnson

by Henry H. Lyon

Atty.

No. 818,968. PATENTED APR. 24, 1906.

E. E. JOHNSON.

RAILWAY WATER COLUMN.

APPLICATION FILED FEB. 29, 1904.

4 SHEETS—SHEET 2

Fig. 2.

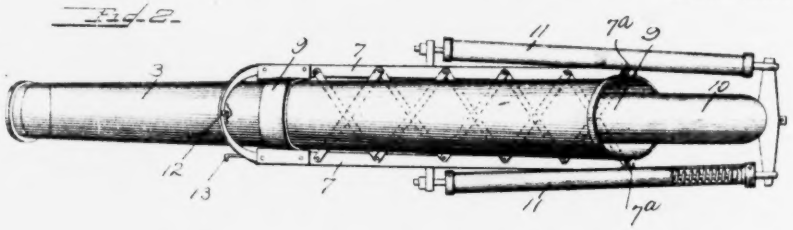

Fig. 11.

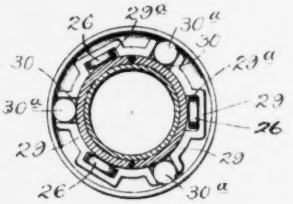

Fig. 15.

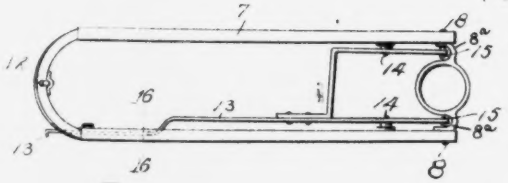

Fig. 16.

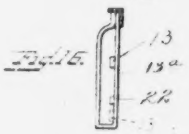

Fig. 10.

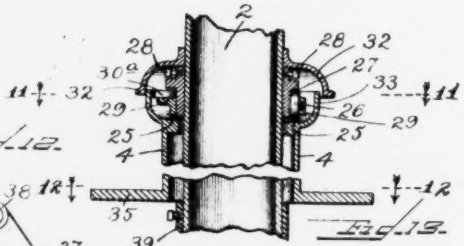

Fig. 12.

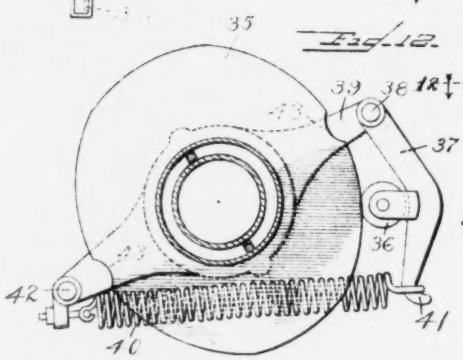

Fig. 13.

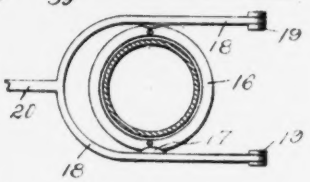

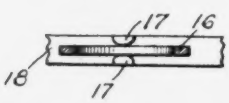

Fig. 14.

Witnesses.

G. A. Pauterschmidt

K. A. Castello.

Inventor.

Edw. E. Johnson

by Young & Carter

Atty.

No. 818,968. PATENTED APR. 24, 1906.

E. E. JOHNSON.

RAILWAY WATER COLUMN.

APPLICATION FILED FEB. 29, 1904.

4 SHEETS—SHEET 3.

Fig. 4.

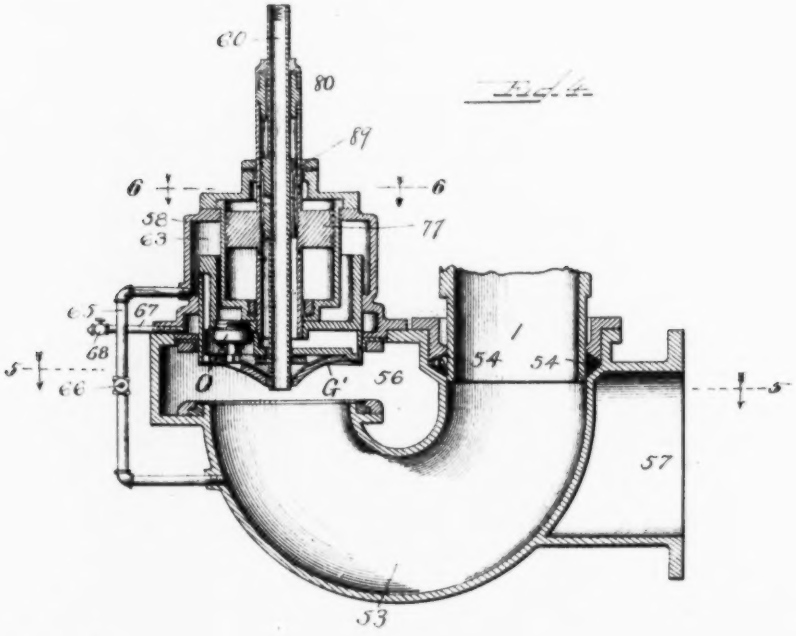

Fig. 5.

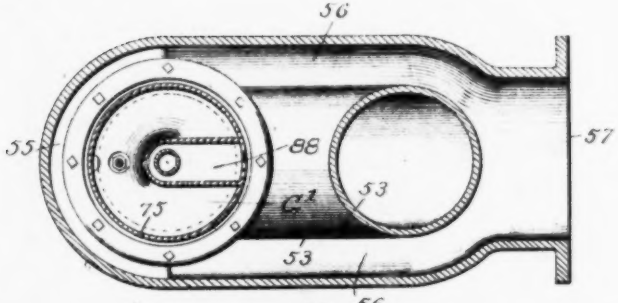

Fig. 6.

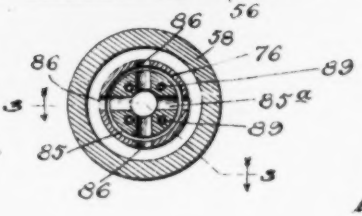

Witnesses.

D. A. Rauberschmidt

K. a. Costello

Inventor.

Edw. E. Johnson

by Henry H. Carlin

Atty.

No. 818,968. PATENTED APR. 24, 1906

E. E. JOHNSON.

RAILWAY WATER COLUMN.

APPLICATION FILED FEB. 29, 1904.

4 SHEETS—SHEET 4.

Fig. 7.

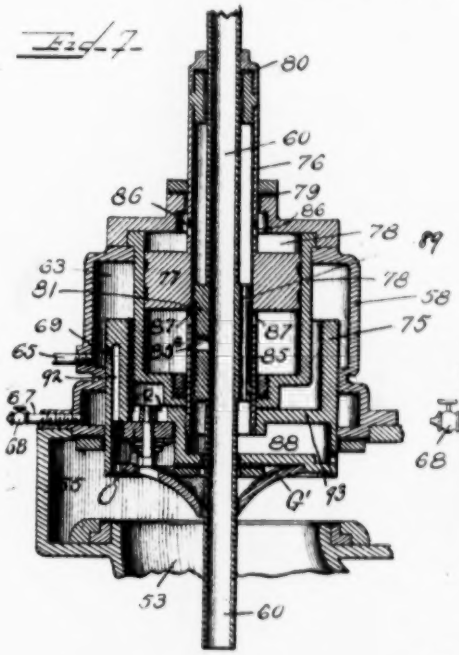

Fig. 8.

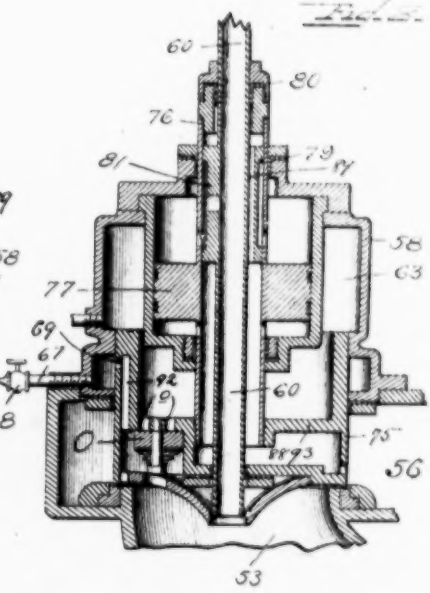

Fig. 9.

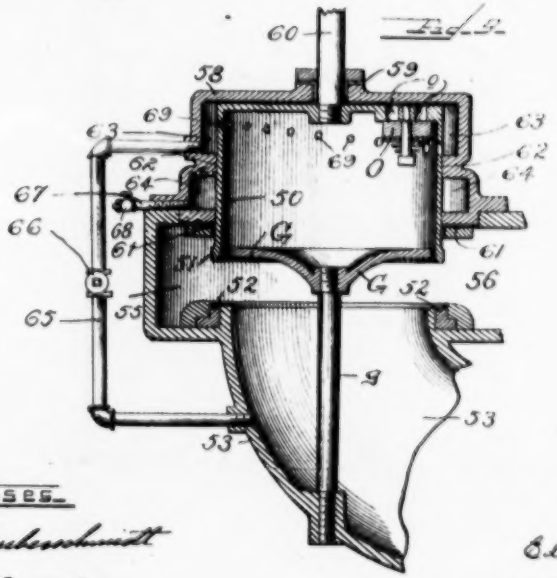

Witnesses.

G. A. Paulesschmidt

K. A. Costello.

Inventor.

Edw. E. Johnson

by Henry W. Cutler

Atty.

UNITED STATES PATENT OFFICE.

EDWARD E. JOHNSON, OF ST. PAUL, MINNESOTA.

RAILWAY WATER-COLUMN.

No. 818,968. Specification of Letters Patent. Patented April 24, 1906.

Application filed February 29, 1904. Serial No. 195,923.

To all whom it may concern:

Be it known that I, EDWARD E. JOHNSON, a citizen of the United States, residing at St. Paul, in the county of Ramsey and State of Minnesota, have invented certain new and useful Improvements in Railway Water-Columns, of which the following is a specification.

This invention relates to improvements in railway water-columns or devices of that class which are more particularly intended for supplying water to locomotive-tenders and which comprise a stand-pipe located alongside of a railway-track or between two such tracks, and a laterally-extended spout on the stand-pipe to be turned either at right angles to the tracks to supply water to locomotive-tenders or parallel to the track to avoid the passing trains when not in use and also adapted to be swung vertically throughout a considerable range of movement for the purpose of bringing the mouth of the spout into immediate proximity to the tank-openings of tenders of various heights and of avoiding the coal which is piled on the tenders above the water-tank.

The present improvements have relation particularly to the most desirable type of this class of apparatus—namely, the type in which the spout is pivoted to the stand-pipe at a point below the end thereof and telescopes at its inner end loosely over the downward-turned end or nozzle portion of the stand-pipe.

One of the defects of railway water-columns of this kind, as heretofore constructed, has been that the end of the spout in moving downwardly swings to one side of a vertical line of descent to such an extent as to carry it laterally beyond the tank-opening or water-hole of the tender, either at the upper or lower or at both limits of its movement; and a principal object of the present invention is to avoid this difficulty by mounting the spout in such manner that the arc of movement described by the end of the spout, even when the range of movement provided is unusually great—six feet, or more—will so closely approach a direct vertical line as to keep the spout at all times in proximity to the tank-opening whatever the height of the tender.

A further object of the invention is to provide water-courses free from obstruction and abrupt changes of direction and a spout draining quickly away from the stand-pipe and not liable to be inoperative from freezing; and other objects are to provide an improved mounting for the water-column tending to automatically return the column to its position of parallelism with the tracks when not in use; also, to provide an improved valve mechanism for controlling the flow of water through the column, and to provide various other features of improvement in the column itself.

To these ends the invention consists in the matters hereinafter described, and more particularly pointed out in the appended claims, when considered in connection with the accompanying drawings, in which—

Figure 1 is a side elevation of a railway water-column constructed in accordance with my invention, the foundation and pit for the base of the column being shown in section. Fig. 2 is a top plan view of the column illustrated in Fig. 1. Fig. 3 is a vertical section of the working parts of the valve shown in Fig. 1, these parts being shown in the position they occupy when the valve is closed. Fig. 4 is a sectional view of the same valve, including its connections with the inlet-pipe and water-column and showing the working parts in the position which they occupy when the valve is open. Fig. 5 is a top plan section taken on line 5 5 of Fig. 4. Fig. 6 is a top plan section taken on line 6 6 of Fig. 4. Figs. 7 and 8 are vertical sections of the valve mechanism, showing the parts in different working positions from those occupied in Figs. 3 and 4. Fig. 9 is a vertical section of a simplified form of the valve mechanism designed to be entirely operated by hand. Fig. 10 is a vertical sectional detail taken through the standard which supports the water-column. Fig. 11 is a top plan section thereof, taken on line 11 11 of Fig. 10. Fig. 12 is a top plan section thereof, taken on line 12 12 of Fig. 10. Fig. 13 is a sectional detail taken on line 13 13 of Fig. 1 and showing the valve-operating connections at the lower end of the stand-pipe. Fig. 14 is a fragmentary detail of a portion of these connections. Fig. 15 is a top plan view of the latticed framework, showing the manner in which the operating-lever is mounted therein. Fig. 16 is a sectional detail taken on line 16 16 of Fig. 15.

As shown in said drawings, the water-column C comprises a vertical stand-pipe 1, to the lower end of which water is admitted through a suitable valve 2 and from the upper end of which water can be discharged through a spout 3. The lower end of the

stand-pipe and its valve 2 are shown as inclosed within a pit P, from which the stand-pipe emerges through a tubular standard 4, within which the stand-pipe 1 is free to swivel upon a vertical axis. For security and permanence of construction the standard 4 is herein shown as cast with a flange 5, which rests upon I-beams 6, that extend across the pit and are buried at their ends in its masonry walls, the standard and column being thus supported independently of the plank top *p* of the pit and not affected by any shrinking or warping of the plank. A frost-floor *p'* is shown as extending across the pit some distance below its top *p*, but above the valve 2 to prevent the latter from freezing up.

As hereinbefore stated, a principal feature of the present construction consists in the peculiar manner of maintaining the spout 3 on the stand-pipe 1 in such way as to permit of the vertical swinging of the spout throughout the desirable arc of movement with but little lateral deflection of its outlet. To this end the spout is shown as carried by a latticed framework 7, which is pivoted at its inner end to oppositely-projecting lugs 8^a to the stand-pipe at a point 8 near the top of the latter, and approximately opposite the middle point of the arc the delivery end of the spout is usually required to describe in being adjusted to tanks of the average height. The framework carries at its outer end an annular collar or band 9, that encircles the spout and rigidly supports it in the framework. The spout itself is an entirely separate piece from the stand-pipe and, except for the framework 7 and for a brace 7^a between the inner end of the spout and the inner end of the framework, has no permanent connection therewith, the upper end of the spout simply serving to loosely inclose a laterally-extending nozzle 9, in which the upper end of the stand-pipe terminates. This nozzle is herein shown as made in the form of a gooseneck 10, the curved middle portion of which extends a considerable distance back of the column on the opposite side from the spout 3 and tends to balance the weight of the spout and to thus relieve the stand-pipe from sidewise strains, while permitting a sufficient movement of the spout over the mouth of the gooseneck to permit its inlet end to extend to a point back of a vertical line drawn through the pivot 8 when the spout is in its uppermost position and at the same time insure such a position of the spout that it will drain freely away from the stand-pipe.

Suitable means, such as coiled springs inclosed within protecting-tubes 11, are shown as stretched between the frame 7 and the back of the gooseneck 10 to normally maintain the spout in its raised position, these springs being at the same time so applied that leverage of the spout against them will increase as the spout is depressed, so that when the spout is in its lowermost position its weight will overcome the tension of the springs and prevent their lifting the spout again except by the assistance of the operator.

The latticed framework being stiffened against a horizontal pull and so attached to the stand-pipe as to swing horizontally with it serves the novel purpose of a lever to rotate the water-column, as well as to support the swinging spout. An upwardly-projecting pin 12 is provided on the extreme end of the frame 7 above the spout to serve as a handle by which the spout can be conveniently swung around horizontally with the stand-pipe, which for this purpose is made to swivel within the standard 4, as before stated.

The flow of water through the stand-pipe is controlled by an operating-lever 13, which extends along the inner under side of the framework 7 to within convenient reach of the operator as he stands upon the tender. This lever is pivoted to the frame 7 at 14 and at its inner extremities is pivotally connected with the upper ends of vertical rods 15, the lugs 8^a being laterally curved to permit this connection with rods 15 to be made in vertical alinement with the pivots 8. The rods 15 extend centrally down each side of the stand-pipe to a point on the latter below the frost-floor of the pit. Here the lower ends of the rods are secured to a ring 16, which loosely encircles the stand-pipe and passes between lugs 17 on a forked lever 18, which latter is secured at its forked end to the valve-casing by links 19 and is connected at its other end 20 to the upper end of the stem of the valve 2. The rods 15 are prevented from twisting on the stand-pipe by sliding loosely through guide-holes in a ring 21, that is clamped about the pipe just below the ring 16, Fig. 1. With this construction the swinging up and down of the spout 3 may obviously take place without affecting the valve, while the valve-operating lever may itself be moved upon the frame in any position of the spout to admit water to the stand-pipe or shut it off therefrom, as desired. The outer end of the lever 13 is shown as projecting through and guided by a loop 13^a, which is located on the frame 7 at one side of the spout and is provided with a stop-lug 22, beneath which the end of the lever may be thrust to hold the valve open while the column is delivering water.

The weight of the stand-pipe and spout is herein shown as supported upon an inner annular shoulder 25 of the standard 4 by a number of anti-friction-rollers 26, that are inserted between the shoulder 25 and an opposing flange or annular ring 27, which latter encircles the stand-pipe and is rigidly clamped thereto by set-screws 28, Fig. 10. The roll-

ers 26 are shown as loosely mounted within a cage 29, that is recessed at 29ª to receive them and is also recessed at 30 to receive horizontal rolls or disks 30ª, that are inserted between the ring 27 and a flaring or bell-like mouth 33 to the standard 4. This double form of bearing serves to support the stand-pipe with but little friction, notwithstanding the fact that the spout projects laterally to a considerable distance from the pipe and is not wholly counterbalanced by the gooseneck at the upper end of the spout. The bearing when complete is enclosed by a flaring cap 32, Fig. 10, which is lowered over the ring 29 and is large enough to embrace the upper end 33 of the standard, thus largely protecting the bearing from dirt and moisture.

For the purpose of causing a more or less automatic action of the stand-pipe tending to swing the spout back into a position parallel with the tracks after the filling of the locomotive-tank has been completed a cam device is provided, as more particularly shown in Figs. 1 and 12. This device includes a stationary oval cam 35 on the lower end of the standard 4, within the pit and above the frost-floor p', and a cam-roller 36, adapted to travel on the outer periphery of said cam. The roller 36 is herein shown as mounted between the ends of a lever 37, of which one end is pivoted at 38 to a yoke 39, that is clamped rigidly around the stand-pipe. A heavy spring 40 is stretched between the other end 41 of the lever 37 and the opposite end 42 of the yoke 39, and its action serves to force the roller 36 against the periphery of the cam 35 with considerable force. This tends to cause the roller 36 to ride down the cam toward least diameter of the latter and reacts, through the lever 37 and yoke 39, to swing the stand-pipe around parallel to the tracks.

At its points of greatest diameter the cam 35 is provided with concentric portions, so that the stand-pipe will have no tendency to rotate while supplying water to the engine, even though the latter may come to a stop when its water-hole is not exactly opposite the stand-pipe. At its points of least diameter, on the other hand, the cam is provided with recesses 43, which serve to receive the roller 36 and tend to hold the stand-pipe against movement when its spout is swung around between the tracks and parallel to the latter. In the position of the parts shown in Fig. 12 the spout may be regarded as occupying a position of about forty-five degrees from its two extreme positions, the roller 36 being ready at this movement to travel down into the adjacent hollow 43 as the spout swings back parallel with the tracks, or to climb the cam in the opposite direction as the spout assumes a position at right angles to the track, as shown in Fig. 1.

The valve which I have designed for my improved water-column is a quick-opening and slow-closing valve, so controlled as to prevent any undue shock or water-hammer, and it is furthermore so constructed as to permit the water remaining in the column after the valve is closed to leak away and prevent freezing in the stand-pipe. Such a valve may be operated either by hand or by the hydraulic pressure of the water in the main. In its simpler hand-operated form, such as is shown in Fig. 9, it comprises a cylindrical main valve 50, the lower annular edge 51 of which is adapted for contact with an annular valve-seat 52. This valve-seat is formed at the outer upper end of a U-shaped discharge pipe or section 53 of the valve, the other end of which is formed with a stuffing-box 54, that receives the lower end of the stand-pipe 1.

Surrounding the valve-seat 52 and inclosing the lower end of the main valve is an inlet-chamber 55, having lateral extensions 56, which are continued along and around the U-shaped pipe 53 to a flanged inlet end 57, where connection is made with the main that supplies water to the valve and stand-pipe. In closing the upper part of the main valve 50 is a housing 58, having at the center of its top a stuffing-box 59, through which the operating-stem 60 of the valve is extended to connect with the lever 18. The main valve 50 passes from this housing down into the chamber 55, through a close-fitting opening which will ordinarily be made water-tight by a hydraulic packing 61. Furthermore, the housing is provided at about midway of its height with an inwardly-projecting annular flange 62, which fits closely around the main valve and forms an approximately water-tight connection therewith, although the absolute prevention of leakage at this point is unnecessary and no special packing need be provided. This flange 62 divides the interior of the housing into an upper or cushioning chamber 63 and a lower leakage-chamber 64. Of these the former or cushioning-chamber 63 is connected with the discharge-pipe 53, leading to the stand-pipe by a by-pass 65, the flow through which is controlled by a valve 66. The lower or leakage chamber 64, on the other hand, is provided with an outlet-pipe 67, which may be conveniently controlled by a petcock 68.

In operation the stem 60 of the valve is drawn up when the hand-lever 13 is actuated to lift the rods 15 and lever 18. This drawing up of the stem 60 raises the main valve from its seat and admits water from the inlet-channels 55 and 56 to the U-shaped discharge-pipe 53, and thence through the stand-pipe and spout to the tank of the engine. To permit this opening movement to be very rapid, the water in the upper or cushioning chamber of the housing 58 is allowed to escape freely, while the main valve 50 is

moving up, principally through an outlet-opening *o*, provided in the top of the main valve 50 and normally closed by a spring-pressed valve-plate O, (conveniently an ordinary rubber pump-valve.)

The closing of the valve is accomplished by swinging the main lever 13 back to its normal position on the latticed framework 7 and by thus depressing the rods 15 and lever 18 and forcing down the valve-stem 60. During this movement the pump-valve O is closed and largely prevents the entrance of water to the cushioning-space above the piston through the opening *o*, and there is a consequent tendency for a vacuum to form in this cushioning-chamber and for the descent of the valve to be thereby retarded. This retardation, however, is modified, as herein shown, by the by-pass 65 and by a series of apertures 69, provided in the cylindric wall of the main valve 50 and through which a limited flow of water may take place during the beginning and greater portion of the valve movement. These apertures are arranged in a row somewhat inclined from the horizontal and are also shown in this instance as made of increasing diameter from the uppermost to the lowermost hole of the series. When the valve is in its uppermost position, the entire series of apertures 69 are located above the flange 62, so that in the initial movement of the valve water can enter the cushioning-chamber through all of them. As the valve moves down, however, the holes 69 are closed off one by one by the flange 62, and as a result there is an increasing tendency for a vacuum to form above the valve and within the cushioning-chamber, with a corresponding increase in retardation until all of the holes 69 are closed off and the by-pass 65 affords the only channel for admitting water behind the main valve. The final closing movement of the valve is then completely controlled by the flow of water through the by-pass, and this may be regulated by adjusting the valve 66. Said by-pass and valve therefore afford an exterior and readily-accessible means of adjusting the valve movement as desired or as may be necessary to prevent undue shock or water-hammer. After the valve has thus closed the water remaining within the stand-pipe gradually leaks away through the outlet-pipe 67 and petcock 68, which latter always will be left at least partially open, this leakage continuing through the apertures 69 and leakage-chamber 64 until the level of the water within the stand-pipe is lowered to the level of the outlet 67, which is a sufficient distance below the frost-floor to obviate all danger of the stand-pipe's freezing up during its periods of operation.

In the more highly developed form of valve (shown in detail in Figs. 3 to 8) the hydraulic pressure of the water from the main is relied upon to operate the valve; but the movement of the valve is controlled in much the same manner as before. This construction also employs a cylindric main valve 75, the annular lower edge of which is adapted for contact with an annular valve-seat 52, formed and located, as before described, in connection with the hand-operated valve. This main valve 75 is connected by a tubular valve-rod 76 with an actuating-piston 77, which is mounted to reciprocate vertically within a pressure-cylinder 78, conveniently located in the upper part of the valve-housing. At its upper end the tubular piston-rod 76 passes out of the top of the housing through a stuffing-box or hydraulic packing 79 and is itself provided with a stuffing-box or hydraulic packing 80, through which the operating-valve 60 is free to reciprocate. A piston-valve 81 fits within the tubular piston-rod 76 and is secured therein to the valve-stem 60, which latter is also made tubular and closed at its upper end, its lower end being left open and projecting down through a hydraulic packing 82 into the discharge-section 53 of the valve.

The valve 81 is essentially a D-valve—*i. e.*, it is provided with upper and lower bearing surfaces or rings 83 and 84, between which is an annular exhaust-passage 85, that communicates with the interior of the valve-stem 60 through one or more ports 85°. Opening through the tubular piston-rod 76 at points above and below the piston 77 are ports 86 and 87, placed so close together that only one set of said ports at a time can be uncovered by the valve-piston 81. These ports admit water to the cylinder 78 either above or below the piston 77, as may be desired, and according to the position occupied by the valve-stem 60. This water enters from the main through a radial channel 88 in the main valve 75 and passes thence up through the tubular piston-rod 76 and (in order to reach the upper ports 86) through vertical channels 89 in the valve 81.

The position occupied by the parts when the main valve is closed and the apparatus is at rest is indicated in Fig. 3.

In Fig. 8 the valve-stem 60 is shown as drawn up so as to admit water to the lower end of the cylinder 78 through the ports 87, the lifting movement of the main valve 75 being now just about to commence.

In Fig. 4 the upward movement of the main valve has just been completed, the valve-stem 60 and inner valve-piston 81 being still raised.

In Fig. 7 the valve-stem 60 and piston 81 are shown as having been depressed with the intention of closing the main valve, the water being just about to enter the upper end of the chamber 78 to force down the piston 77 and close the valve.

The cushioning action of the valve in this case is much the same as in the case of the

COPY BOUND CLOSE IN CENTER

manually-operated valve shown in Fig. 9. The interior of the housing 58 around the main valve 75 is divided by a similar inwardly-projecting flange 62 into an upper cushioning-chamber 63 and a lower leakage-chamber 64, the former being connected with the discharge-pipe 56 of the valve-casing by a by-pass 65, controlled by a valve 66, and the cylindric wall of the valve is provided with a similar inclined row of apertures 69 of varying sizes which open into the cushioning chamber 63 above the valve 62, or into the position occupied by the valve. At their inner ends these apertures 69 in this instance open into a segmental port 92, which is cored in the cylindric wall of the main valve 75 and leads down and out beneath the transverse wall 93 thereof, said apertures and port thus constituting channels of communication between the opposite sides of the main valve. A large outlet through the main valve is also herein shown as provided in an opening *o*, located in the transverse wall 93 of the valve, and controlled by a spring-pressed valve-plate O, (also conveniently an ordinary pump-valve,) which permits water to flow out of the cushoning-chamber through the opening *o*, but prevents it from entering the chamber at this point. With this construction when the valve-stem 60 and piston-valve 81 are drawn up water is admitted from the main to the lower end of the cylinder 78 through the radial channel 88, tubular piston-rod 76, and ports 87, Fig. 8. This forces up the piston 77 and causes the main valve to be lifted with the piston, by reason of their being rigidly connected by the tubular piston-rod 76. During this opening movement of the main valve, the water in the cushioning-chamber 63 readily escapes, principally through the outlet-opening *o*, and the valve consequently opens very quickly, and finally assumes the position shown in Fig. 4.

To reverse the operation, the valve-stem 60 and piston 81 are depressed and water is admitted to the upper end of the cylinder 78 through the radial channel 88, tubular piston-rod 76, vertical channels 89, and ports 86, and the piston 77 is forced down, carrying with it the main valve 75. The initial closing movement takes places rapidly and freely, owing to the large area of communication with the cushioning-chamber afforded by the several holes 69, by which water from beneath the valve 75 is permitted to rush into said chamber and relieve the tendency for a vacuum to form behind the valve. This area, however, gradually decreases as the holes 69 are cut off by the flange 62 until just before the valve comes in contact with its seat. The only remaining channel through which water may enter the space behind the valve 75 is the by-pass 65. So that by adjusting the capacity of this by-pass by means of the valve 66 the final closing movement of the main valve 75 may be controlled to occur as gently as possible and in the same manner as in the case of the hand-operated valve.

In both forms of this improved valve mechanism a curved guide-plate will desirably be provided to direct the water smoothly into the discharge-pipe 53 when the valve is opened, and thus avoid eddies and cross-currents, which might otherwise interfere with the efficient working of the apparatus. In the manually-operated valve shown in Fig. 9 this guide-plate (designated G) is a stationary plate which nearly fills the lower end of the piston-valve 50 and is supported therein at a considerable distance above the valve-seat 52 by a standard *g*, the lower end of which is firmly secured by a screw-joint or otherwise in the casting of the discharge-pipe 53 beneath.

In the form of valve shown in Figs. 3 to 8, however, such a guide-plate G′ is permanently secured to the lower side of the valve 75 and moves with it. A central aperture is also provided in this plate G′ for the hollow valve-stem 60 to reciprocate freely through and to thereby discharge the water exhausted from the cylinder 78 into the discharge-pipe 53 in either the closing or opening movement of the main valve and its actuating-piston.

I claim as my invention—

1. A water-column, comprising a stand-pipe terminating at its upper end in a nozzle, a spout swinging loosely over the nozzle and draining away from the stand-pipe, and a support for the spout pivoted to the stand-pipe at a point approximately opposite the middle point of the arc the delivery end of the spout is usually required to describe in being adjusted to tanks of the average height and below the uppermost level of the outlet of the spout, substantially as described.

2. A water-column comprising a stand-pipe terminating at its upper end in a nozzle, a swinging spout fitting loosely over the nozzle and draining away from the stand-pipe, a support for the spout pivoted to the stand-pipe at a point approximately opposite the middle point of the arc the delivery end of the spout describes in descending and ascending forward of the inlet end of the spout in its uppermost position, substantially as described.

3. A water-column comprising a stand-pipe terminating at its upper end in a nozzle, a swinging spout fitting loosely over the nozzle, a support for the spout pivoted to the stand-pipe at a point approximately opposite the middle point of the arc the delivery end of the spout is usually required to describe in being adjusted to tanks of the average height and below the level of the outlet end and forward of the inlet end of the spout when in its uppermost position, substantially as described.

4. A water-column comprising a stand-pipe terminating at its upper end in a nozzle, a

spout swinging loosely over the nozzle, and draining away from the stand-pipe, and a support for the spout pivoted to the stand-pipe at a point approximately opposite the middle point of the arc the delivery end of the spout is usually required to describe in being adjusted to tanks of the average height and below the outlet and forward of the inlet end of the spout in its uppermost position, substantially as described.

5. A water-column, comprising a stand-pipe terminating at its upper end in a nozzle, a swinging spout fitting loosely over the nozzle, and a support for the spout pivoted to the stand-pipe approximately opposite the middle point of the arc the delivery end of the spout is usually required to describe in being adjusted to tanks of the average height and engaging the spout about midway of the length of the latter, substantially as described.

6. A water-column, comprising a stand-pipe terminating at its upper end in a nozzle, a swinging spout fitting loosely over the nozzle and draining away from the stand-pipe, and a support for the spout pivoted at its inner end to the stand-pipe at a point approximately opposite the middle point of the arc the delivery end of the spout is usually required to describe in being adjusted to tanks of the average height and below the uppermost level of the mouth of the spout and secured at its outer end to the spout about midway of the length of the latter, substantially as described.

7. A water-column comprising a stand-pipe terminating at its upper end in a nozzle, a spout swinging loosely over the nozzle and draining away from the stand-pipe, and a support for the spout pivoted at its inner end to the stand-pipe at a point approximately opposite the middle point of the arc the delivery end of the spout is usually required to describe in being adjusted to tanks of the average height and secured at its outer end to the spout about midway of its length, substantially as described.

8. A water-column comprising a stand-pipe terminating at its upper end in a nozzle, a swinging spout draining away from the stand-pipe in all its positions having a support pivoted to the stand-pipe at a point below the outlet end of the spout and provided with means whereby the stand-pipe may be swung about horizontally, said pivot being located approximately opposite the middle point of the arc the delivery end of the spout is usually required to describe in being adjusted to tanks of the average height, substantially as described.

9. A water-column, comprising a stand-pipe terminating at its upper end in a nozzle, a swinging spout fitting loosely over the nozzle, and means for pivotally supporting the spout upon the stand-pipe, comprising a supporting-frame pivoted at its inner end to the stand-pipe at a point approximately opposite the middle point of the arc the delivery end of the spout is usually required to describe in being adjusted to tanks of the average height and secured at its outer end to the spout about midway of the length of the latter, and a brace extending between the inner end of the supporting-frame and the inlet end of the spout, substantially as described.

10. A water-column comprising a stand-pipe terminating in a nozzle, a spout swinging loosely over the nozzle, means for pivotally supporting the spout upon the stand-pipe comprising a supporting-frame pivoted at its inner end to the stand-pipe at a point approximately opposite the middle point of the arc the delivery end of the spout is usually required to describe in being adjusted to tanks of the average height and secured at its outer end at about midway of the spout, and a brace between the inner end of the supporting-frame and the inlet end of the spout, and means for rotating the stand-pipe, substantially as described.

11. A water-column, comprising a stand-pipe, terminating at its upper end in a reversely-curved gooseneck, as shown, a swinging spout fitting loosely over the nozzle of the gooseneck, and a support for the spout pivoted to the stand-pipe, substantially as described.

12. A water-column comprising a stand-pipe terminating at its upper end in a reversely-curved gooseneck, as shown, a spout swinging loosely over the nozzle of the gooseneck and a support for the spout pivoted to the stand-pipe at the base of the gooseneck, the curvature of the gooseneck permitting the inlet end of the spout to swing backward past the vertical axis of its supporting-pivot, substantially as described.

13. A water-column, comprising a stand-pipe terminating in a nozzle, a spout swinging loosely over the nozzle, a support for the spout pivoted at its inner end to the stand-pipe and secured at its outer end to the spout about midway the length of the same and counterbalancing devices applied between the stand-pipe and spout-support, these devices being connected to the stand-pipe and the support at points above the pivot substantially as described.

14. A water-column comprising a stand-pipe terminating at its upper end in a nozzle, a spout swinging loosely over the nozzle, a support for the spout pivoted at its inner end to the stand-pipe and secured at its outer end to the spout about midway the length of the same and counterbalancing springs applied between the stand-pipe and spout-support, these devices being connected to the stand-pipe and the support at points above the pivot substantially as described.

15. A water-column, comprising a stand-

pipe terminating at its upper end in a gooseneck, a swinging spout fitting loosely over the nozzle of the gooseneck, a support for the spout pivoted to the stand-pipe at the base of the gooseneck, and counterbalancing devices applied between the support and gooseneck, substantially as described.

16. A water-column, comprising a stand-pipe terminating at its upper end in a nozzle, a swinging spout fitting loosely over the nozzle, a support for the spout pivoted to the stand-pipe and engaging the spout about midway of the length of the latter, a valve-operating lever pivoted to the spout-support, a valve at the base of the stand-pipe, and connections between said valve and valve-operating lever, substantially as described.

17. A water-column, comprising a stand-pipe terminating at its upper end in a nozzle, a swinging spout fitting loosely over the nozzle, a support for the spout pivoted to the stand-pipe and engaging the spout about midway of the length of the latter, a valve-operating lever pivoted to the spout-support and extending longitudinally of the latter, a guide for the lever depending from the outer end of said support, a shoulder of said guide beneath which the lever may be caught, a valve at the base of the column, and connections between said valve and lever, substantially as described.

18. A water-column, comprising a stand-pipe terminating at its upper end in a nozzle, a pair of oppositely-extending curved lugs carried by the standard, a spout having its inlet end telescoping over the nozzle said spout inclining downwardly away from the stand-pipe, a supporting-frame attached to the spout and pivoted at its inner end to said lugs; a valve at the foot of the stand-pipe, valve-operating rods at opposite sides of the stand-pipe and working in line with the pivots of the spout-carrying frame, and means on this frame for reciprocating said rods, for the purposes set forth.

19. A water-column, comprising a stand-pipe terminating at its upper end in a nozzle, a swinging spout fitting loosely over the nozzle, a support for the spout pivoted to the stand-pipe, a valve-operating lever pivoted to said spout-support, a valve at the foot of the stand-pipe, and exterior connections extending down the stand-pipe between the lever and valve, substantially as described.

20. A water-column comprising a stand-pipe terminating in a nozzle, a spout swinging loosely over the nozzle, a spout-support pivoted to the stand-pipe and rigidly secured to the spout, a valve-operating lever pivoted to said spout-support, exterior valve connections between the lever and the valve hinged to said lever so that in the normally closed position of the valve the pivots and hinges lie in a common axis, and a valve at the foot of the stand-pipe, substantially as described.

21. In a water-column, of the character described, the combination with a stand-pipe having an extended discharge-nozzle secured at the head thereof, a discharge-pipe whose inner end telescopes with said discharge-nozzle so as to be moved freely thereon, and which inclines downwardly away from said nozzle in all its positions, a connection uniting said discharge-pipe with the stand-pipe of the water-column and pivoted to said stand-pipe in a horizontal plane below the horizontal plane of the outlet of the discharge-pipe when in its fully-elevated position at a point approximately opposite the middle point of the arc the delivery end of the spout is usually required to describe in being adjusted to tanks of the average height, and means for counterbalancing the discharge-pipe, whereby the range of movement of said outlet is in a substantially vertical plane.

22. A water-column, comprising a stand-pipe terminating at its outer end in a reversely-curved gooseneck-nozzle, a swinging spout fitting loosely at its upper inlet end over said nozzle, and inclining downwardly away from the nozzle in all its positions, a support for the spout pivoted to the stand-pipe at a point below the discharge end of the spout, said reversely-curved gooseneck permitting the inlet end of the spout to swing backward past the vertical plane of the supporting-pivot, substantially as set forth.

23. A water-column, comprising a stand-pipe swiveled in a vertical standard, and a bearing between the stand-pipe and standard comprising a downwardly and an outwardly facing annular bearing-surface on the stand-pipe, an upwardly and an inwardly facing bearing-surface on the standard, a set of horizontal antifriction-rollers inserted between said inwardly and outwardly facing surfaces, a set of vertical rollers between the downwardly and upwardly facing surfaces and an annular cage inclosing the several rollers and holding them between the shoulders and bearing-surfaces, substantially as described.

24. A valve mechanism comprising a hollow cylindric main valve whose interior is in communication with the inlet when the valve is open, a housing into which the valve retreats, a leakage-chamber within said housing, and an opening in the side wall of the main valve through which communication is established between the leakage-chamber and the discharge-pipe leading from the valve when the valve is closed, substantially as described.

25. A valve mechanism comprising a hollow cylindric main valve whose interior is in communication with the inlet when the valve is open, a housing into which the valve retreats, a packing through which the valve works, a leakage-chamber within said housing beyond the packing, and an inclined row of openings in the side wall of the main valve

communicating with the discharge-pipe leading from the valve and arranged to be brought into communication with the leakage-chamber in succession in the closing movement of the valve, substantially as described.

26. A valve mechanism comprising a hollow cylindric main valve whose interior is in communication with the inlet when the valve is open, a housing into which the valve retreats, a packing through which the valve works, a leakage-chamber within said housing beyond the packing, and a series of apertures of graded sizes in the side wall of the main valve communicating with the discharge-pipe leading from the valve and arranged to be brought into communication with the leakage-chamber in succession in the closing movement of the valve, substantially as described.

27. A valve mechanism comprising a cylindric main valve, a housing into which the valve retreats and provided with a packing through which the valve works, and a flange in the housing beyond the packing dividing it into separate cushioning and leakage chambers, substantially as described.

28. A valve mechanism comprising a cylindric main valve, a housing into which the valve retreats and provided with a packing through which the valve works, a flange in the housing beyond the packing dividing it into separate cushioning and leakage chambers, and means permitting a suitable flow of water into and out of these chambers at appropriate times in the operation of the valve movement, substantially as described.

29. A valve mechanism comprising a cylindric main valve, a housing into which the valve retreats and provided with a packing through which the valve works, a flange in the housing beyond the packing dividing it into separate cushioning and leakage chambers, and an opening through the main valve communicating alternately with the cushioning and leakage chambers as the valve is opened and closed, substantially as described.

30. A valve mechanism comprising a cylindric main valve, a housing into which the valve retreats and provided with a packing through which the valve works, a flange in the housing beyond the packing dividing it into separate cushioning and leakage chambers, and an inclined row of openings in the main valve arranged to be gradually brought into communication with the cushioning-chamber and leakage-chamber in alternation as the valve is opened and closed, substantially as described.

31. A valve mechanism comprising a cylindric main valve, a housing into which the valve retreats and provided with a packing through which the valve works, a flange in the housing beyond the packing dividing it into separate cushioning and leakage chambers, and a series of openings of graded sizes in the main valve arranged to be gradually brought into communication with the cushioning-chamber and leakage-chamber in alternation as the valve is opened and closed, substantially as described.

32. A valve mechanism comprising a hollow cylindric main valve, a housing into which the valve retreats, a packing for the valve separating the water-inlet from the interior of said housing, a flange in the housing beyond the packing dividing it into separate cushioning and leakage chambers, an opening through the main valve communicating alternately with the cushioning and leakage chambers as the valve is opened and closed, and a by-pass opening out of the cushioning-chamber and into the discharge, substantially as described.

33. A valve mechanism comprising a hollow cylindric main valve, a housing into which the valve retreats, a packing for the valve separating the water-inlet from the interior of said housing, a flange in the housing beyond the packing dividing it into separate cushioning and leakage chambers, an opening through the main valve communicating alternately with the cushioning and leakage chambers as the valve is opened and closed, and an external valved by-pass opening out of the cushioning-chamber and into the discharge to regulate the movement of the main valve, substantially as described.

34. A valve mechanism comprising a cylindric main valve, an annular seat for the valve, a housing into which the valve retreats, a hydraulic cylinder within the housing, and a piston within said cylinder connected with the main valve to open and close the latter, substantially as described.

35. In combination with a casing having an annular valve-seat surrounding the outlet, a housing connected to said casing, a cylindric main valve adapted to seat on said valve-seat and adapted to retreat into said housing when it is open, a hydraulic cylinder extending into said housing, a piston working in said hydraulic cylinder and connected by a hollow piston-rod to said main valve, said hollow piston-rod being in communication at its inner end with the inlet of the casing, and a controlling-valve within the hollow piston-rod, substantially as set forth.

36. A valve mechanism comprising a cylindric main valve, a hydraulic cylinder, a piston within the hydraulic cylinder, a hollow piston-rod communicating with the inlet-pipe and hydraulic cylinder and serving to connect said piston and main valve, a hydraulic valve within the piston-rod for controlling the admission of water to and its escape from said cylinder, and a hollow valve-stem secured to the controlling-valve and affording an exhaust-passage from the hydraulic cylinder to the outlet-pipe, substantially as described.

37. A valve mechanism comprising an inlet-chamber and an outlet-chamber, a ring valve-seat surrounded by the inlet-chamber, a hollow cylindric main valve adapted to seat on said ring and having its interior open to the inlet-chamber when the valve is open, a housing into which the valve retreats separated from the inlet-chamber by a packing, an annular partition for dividing the housing into a leakage-chamber, and a cushioning-chamber, a by-pass connecting the cushioning-chamber with the discharge-chamber, means for operating the valve, said valve being provided with openings in its side wall, adapted to alternately communicate with the cushion-chamber and the leakage-chamber, and a normally closed valve in its head, said valve opening inwardly with respect to the main valve.

38. In a water-column, of the character described, the combination with a stand-pipe of an extended discharge-nozzle secured at the head thereof, a discharge-pipe whose inner end telescopes with said discharge-nozzle so as to be moved freely thereon, a connection uniting said discharge-pipe with the stand-pipe of the water-column and pivoted to said stand-pipe in a horizontal plane below the horizontal plane of the outlet of the discharge-pipe when in its fully-elevated position, and means for counterbalancing the discharge-pipe, whereby the range of movement of said outlet is in a substantially vertical plane.

In testimony that I claim the foregoing as my invention I affix my signature, in presence of two subscribing witnesses, this 27th day of January, A. D. 1904.

EDWARD E. JOHNSON.

Witnesses:

HENRY M. CURTS,

K. A. COSTELLO.

C. K. DODGE & J. PALMER.

Locomotive-Watering Pipes.

No. 158,049. Patented Dec. 22, 1874.

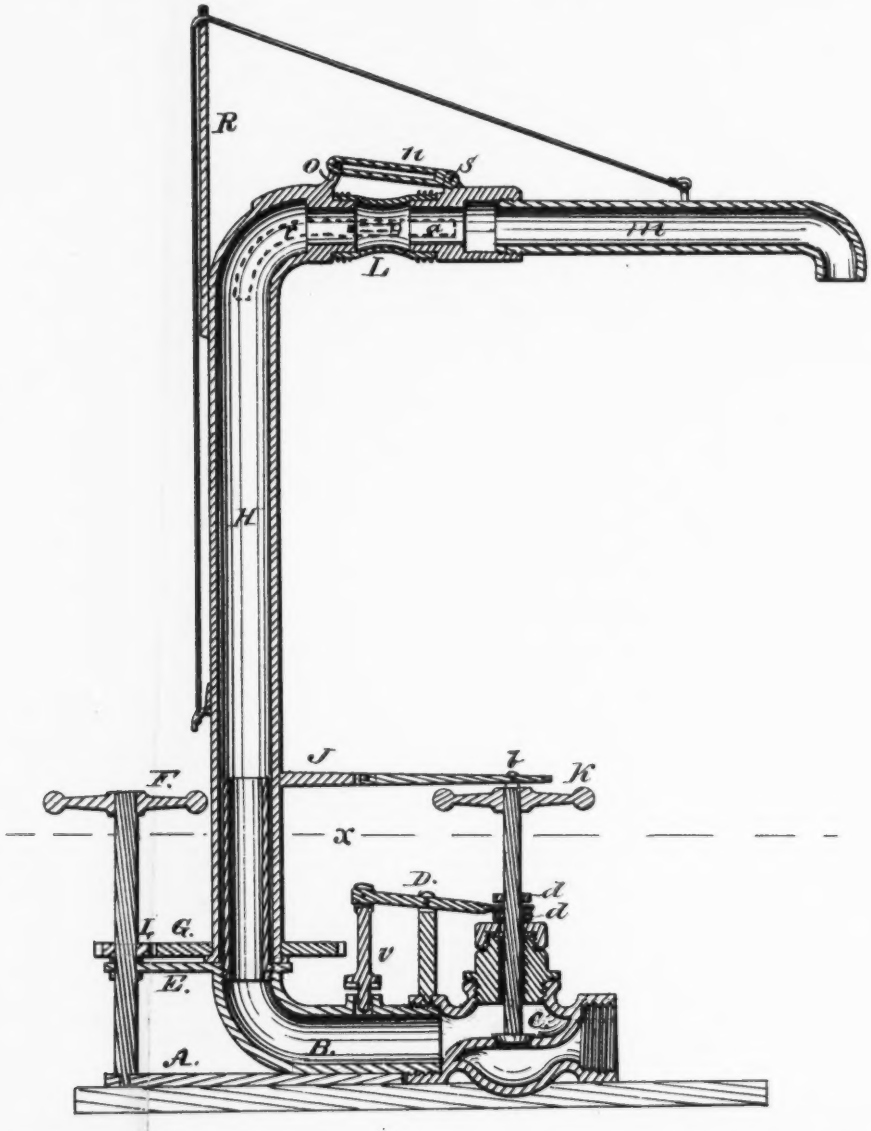

Witnesses

S H Wheeler
J C Wheeler

Inventors

Caleb K Dodge
John Palmer

UNITED STATES PATENT OFFICE.

CALEB K. DODGE AND JOHN PALMER, OF NILES, MICHIGAN.

IMPROVEMENT IN LOCOMOTIVE WATERING-PIPES.

Specification forming part of Letters Patent No. **158,049**, dated December 22, 1874; application filed February 21, 1874.

To all whom it may concern:

Be it known that we, CALEB K. DODGE and JOHN PALMER, of the city of Niles, county of Berrien and State of Michigan, have invented a new and useful Improvement in Locomotive Watering-Pipes, of which the following is a specification:

The nature and object of this invention are to produce a convenient and practical device for supplying locomotive-tenders with water when the water is drawn from an elevated reservoir, and is constructed with reference to watering two tracks from one and the same device.

The accompanying drawing forms a part of this specification, and shows a vertical longitudinal view through the diameter of all of the parts, except the hinge and link attachment *r a o s n*, which are shown in their proper places by a side view.

Letters of reference are marked on the drawing to denote the parts referred to in the written part of this specification, of which—

A represents a bed-plate. This plate forms a common support for the device. B represents the lower horizontal pipe. This is placed in a pit in the ground to protect it from frost, and all the parts of the device shown in the drawing are placed below the surface of the ground, excepting the parts above the line *x*. One end of said pipe is connected with the main supply-pipe, and the other end is bent up to a vertical position. C is a large globe supply-valve having a screw-threaded stem in the usual manner. Said stem extends up to a convenient height, and is surmounted by the hand-wheel *k*. Collars *d d* are attached to the valve-stem, between which one end of the centrally-pivoted lever D is confined; the other end of the said lever is pivoted to the stem of waste-water valve *r*. By this arrangement the opening of the supply-valve closes the waste-water valve, and vice versa. E represents a yoke, attached to the base of the vertical part of the pipe B, and is extended horizontally, so as to receive and support the shaft of the hand-wheel F. G represents a spur-wheel attached to the lower end of the rotating pipe H. The teeth of this wheel engage with the teeth of the pinion I on the shaft of the wheel F. The pipe H fits snugly over the vertical part of the pipe B, and rotates upon it. J represents a jointed arm attached to the pipe H, the movable end of which has an eye corresponding with eyes in the lug *b*, on top of the hand-wheel *k*, for the reception of a locking-pin. The arm may also be used for rotating the pipe H, if desired. The upper end of the pipe H is provided with an elbow, to which is attached one end of a short section of flexible pipe, L; the other end of the flexible pipe is attached to the delivery-pipe *m*.

In order to relieve the flexible pipe from supporting the weight of the delivery-pipe, and to protect it from other strains, a self-adjusting hinge is made by attaching to the opposite sides of said elbow slotted bars *r r*. These bars extend about half the length of said flexible pipe, meeting and connecting by means of a slot and pivot with the bars *a a*, attached to the delivery-pipe *m*. And in order to prevent the outer end of the delivery-pipe from dropping too low, the link *n* is attached at one end, by a pivot, to the lug *s* on pipe *m*. The other end of said link is pivoted loosely to the lug O on the elbow of pipe H. R represents a standard attached to, and extending above, pipe H, through which works a cord or chain, for the purpose of raising and lowering the outer end of the delivery-pipe.

Having thus fully described our invention, what we claim, and desire to secure by Letters Patent, is—

1. In a locomotive watering device, the combination of the jointed locking-arm J, rotating pipe H, and hand-wheel *k*.

2. In a locomotive watering device having the flexible pipe-connection L, the self-adjusting hinge, consisting of the slotted bars *r r*, bars *a a*, and link *n*, attached to lugs *s* and *o* for the support of the flexible pipe L, all constructed, arranged, and combined as and for the purposes herein set forth.

CALEB K. DODGE.
JOHN PALMER.

Witnesses:
S. H. WHEELER,
I. O. WHEELER.

2 Sheets—Sheet 1.

J. CANTELO.

Swing-Pipe for Water-Tanks.

No. 209,861. Patented Nov. 12, 1878.

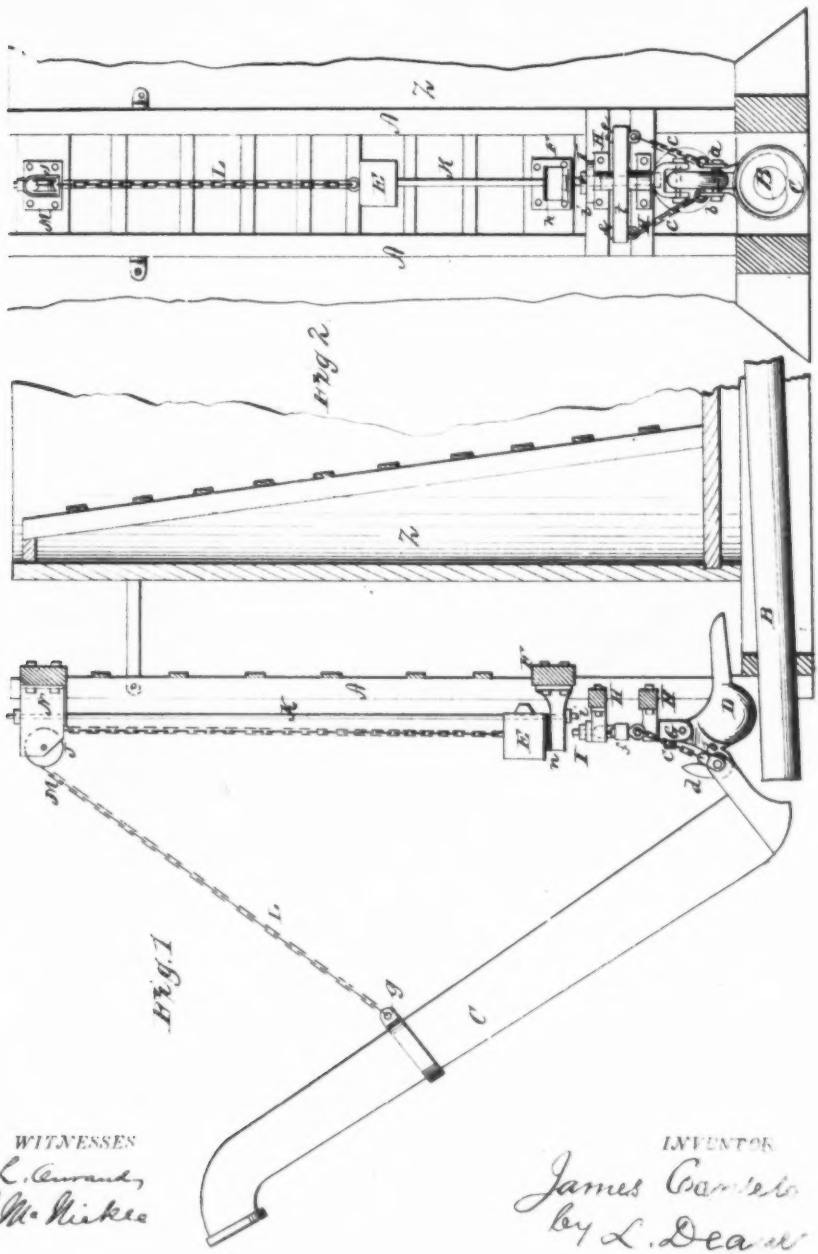

WITNESSES

F. L. Ouvrard

P. McNickle

INVENTOR

James Cantelo

by L. Dean

Atty

2 Sheets—Sheet 2.

J. CANTELO.

Swing-Pipe for Water-Tanks.

No. 209,861. Patented Nov. 12, 1878.

Fig. 3.

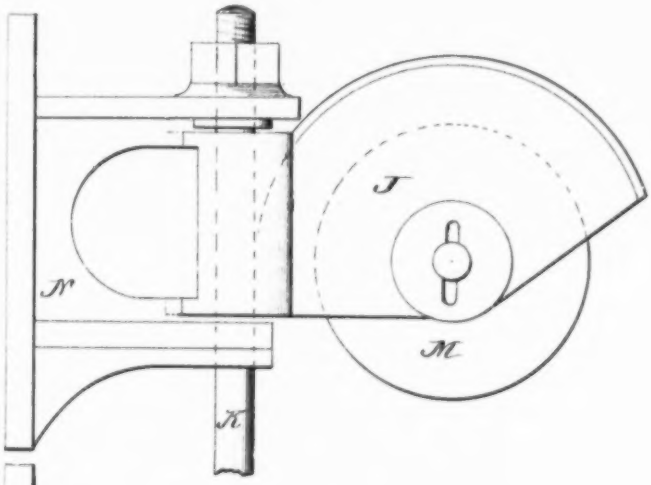

Fig. 4

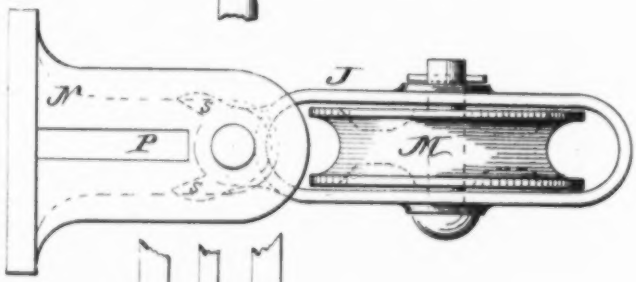

Fig. 5

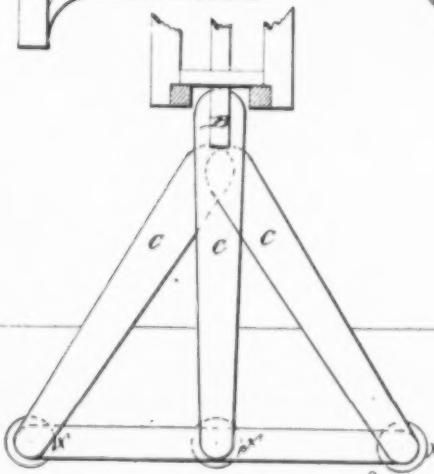

WITNESSES

F. L. Arnold,

C. McKiele.

INVENTOR

James Cantelo.

by L. Deane, Atty

UNITED STATES PATENT OFFICE.

JAMES CANTELO, OF CEDAR RAPIDS, IOWA.

IMPROVEMENT IN SWING-PIPES FOR WATER-TANKS.

Specification forming part of Letters Patent No. **209,861**, dated November 12, 1878; application filed October 22, 1878.

To all whom it may concern:

Be it known that I, JAMES CANTELO, of the city of Cedar Rapids, in the county of Linn and State of Iowa, have invented certain new and useful Improvements in Swing-Pipes for Water-Tanks, of which the following is a specification:

My invention relates more particularly to the arrangement of a pipe for conveying water from railroad-tanks to engines, and has for its object ease and quickness of operation, freedom from ice or other clogging substance, slight liability to get out of repair, and the peculiar advantage of allowing the nozzle of the pipe to move laterally a distance of several feet, thus accommodating itself to the difficulty of stopping the engine at a precise spot each time.

In the accompanying drawings, Figure 1 represents a side view of my invention, with a portion of the tank; Fig. 2, a front view of the same; Figs. 3 and 4, the detail of the elevating-sheave, and Fig. 5 an ideal representation of the lateral throw of the pipe.

Similar letters of reference indicate corresponding parts.

A A are two uprights, fastened at a proper distance from the tank Z, and extending from its base upward. To these uprights may be fastened strips to form a ladder, if desired. At or near the upper extremity of the said uprights is placed a sheave, M, over which a rope or chain, L, passes. One end of the rope or chain is attached to the swing-pipe C, as indicated at *g*. The other end connects with a weight, E, so adjusted as nearly to balance the pipe. A bracket, F, is placed at the limit of the weight's descent, and a cushion of rubber, *a*, in its upper face receives and modifies the shock of the weight in falling. From bracket F upward a rod, K, extends to a bracket or arm, N, at the top. This rod passes through a hole in weight E, and serves the double purpose of affording a guide for the same and a pivot for the sheave-block J.

By reference to Figs. 3 and 4 it will be seen that the sheave-block is provided with two projections, *s s*, which, extending back of the pivot-rod, strike the feather P as the sheave-block swings, and prevent the same from going too far to either side. An ordinary swivel effects the same purpose in a degree, and may be used, if preferred.

While providing a device which permits the sheave to follow the lateral movement of the swing-pipe, it is not intended to confine the invention to the use of the one described.

Below the lower bracket above mentioned two boxes are fastened to the frame-work of the uprights, one above the other. A connecting arm or swivel, I, is made to move freely in these boxes H H, and is adjusted to the proper height by means of the nut *i* at its upper end. The thread upon which this nut operates may be cut upon the main shaft; or the same may be cored out, and a bolt of the ordinary form introduced, as indicated in Fig. 2 by broken lines. Two arms extend at right angles from this connecting arm or swivel. In their ends eyebolts *e e*, made adjustable, connect with rods or chains *c c*, and these, in turn, with links *b b*, connecting with lugs formed on the base of the swing-pipe. A further connection is made by means of a weight of peculiar form, D, the upper end of which is hinged to the swivel I, and a hook or slot, *d*, on its lower end receives the pin, which connects the links and lugs above referred to. The office of this weight is to keep the base of the swing-pipe steady and in place, and also to force it beyond the end of the conduit-pipe B, as the swing-pipe is raised in a manner that will be easily understood. The extended tail serves to add extra weight, and at the same time permits the same to move freely between the uprights A A, according as the position of the swing-pipe is changed.

To secure great latitude of movement in the swing-pipe, it is made much larger at its base than the pipe leading to the tank. The latter is allowed also to extend to a considerable distance beyond the tank, that in all the various positions of the swing-pipe it may enter the latter, as indicated in Fig. 5. The range of lateral movement thus obtained is by this means made to exceed the length of the swing-pipe; and even greater freedom of movement might be had, if desired, by increasing the length of the conduit-pipe and the size of the other.

Another advantage arising from the enlargement of the swing-pipe is the rapidity with

which it discharges the water poured into it by the other pipe—a superiority alone over many of the devices of similar character now in use.

It will be seen that the base of the swing-pipe is drawn in on the under side. The object of this is to prevent all possible back-water and insure a fluent discharge without the disagreeable leakage common to so many pipes. This slight alteration from the ordinary form permits the pipe to be swung to any possible lateral angle without choking and overflowing.

The benefit resulting from this free movement of the pipe is found in the ease with which the operator stops his engine to "water up." With most, if not all, of the present appliances he is obliged to stop at a given point in order to insert the nozzle into the hole in the tender, while by this arrangement he need only to stop anywhere within several feet of a point opposite the center of the tank. The amount of vexation and delay thereby obviated cannot be estimated.

Another important advantage presented by my invention is its freedom from any liability to clog with ice. In all pipes of this nature the joints of which are made comparatively close there is opportunity for the water to collect therein, and, freezing, cause much annoyance and expense. The possibility of such inconvenience does not exist as regards this invention, leaving, as it does when raised, full chance for the water to escape from both pipes.

As a result of the pipe's freedom of movement its danger from passing engines or other opposing forces is materially lessened. Where other pipes having a rigid and simply vertical motion would be broken if from any neglect in hoisting or otherwise they should be struck by a locomotive, this pipe would only be swung around, and no harm would result to it.

The ease with which this pipe is operated constitutes another important feature. By having the pipe and weight balance, it will be readily seen that little effort is required in its management.

While representing the swing-pipe suspended from the frame-work by both chains and weight, it is not intended that both shall be invariably used in connection. Either one may be dispensed with, if desired, and the effectiveness of my invention not be destroyed thereby.

The object of the chains or bail is to steady the pipe and act as a support either with or without the weight. The weight in the same manner, when used alone, suspends the pipe, and also throws its base beyond the end of the conduit-pipe as the other is raised, thus preventing any catching, as might otherwise occur. Either one alone is a complete support, and, properly constructed, may serve in a degree the office of both.

Having thus described my invention, what I claim as new, and desire to secure by Letters Patent, is—

1. The sheave-block J, having projections *s s*, in combination with feather F, weight E, and pipe C, substantially as and for the purposes described.

2. The weight D, hinged to the swivel I, and having hook *d*, and combined with pipe C, substantially in the manner set forth.

3. In combination with the swivel I, arm *t*, the chains *c c*, and swing-pipe C, substantially as described.

4. The combination of swing-pipe C, swivel I, chain or bail *c c*, weight D, and conduit-pipe B, substantially in the manner and for the purposes set forth.

5. The combination of pipe C, sheave M, cord or chain L, weight E, and cushion *n*, substantially as set forth.

6. The combination of pipe C, sheave M, weight E, and guide-rod K, substantially in the manner and for the purposes set forth.

JAMES CANTELO.

Witnesses:
ST. JOHN,
R. H. GILMORE.

No. 782,496. PATENTED FEB. 14, 1905.

N. P. FENNER, Jr.

WATER COLUMN.

APPLICATION FILED MAR. 21, 1904.

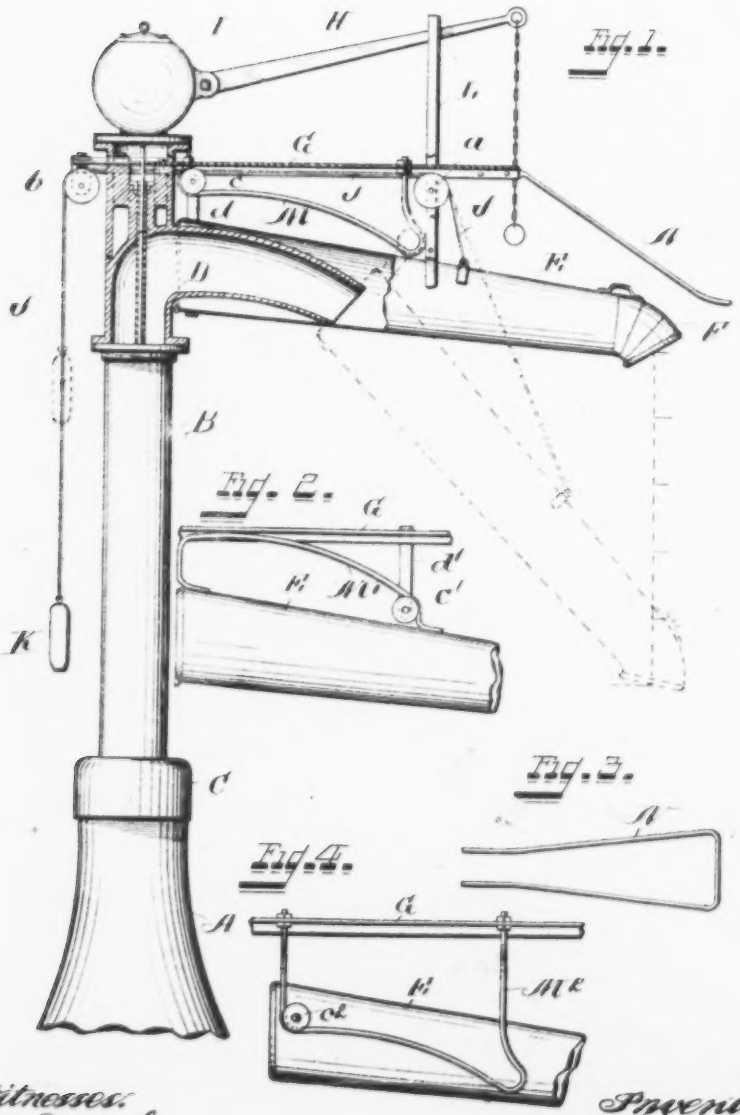

Fig. 1.

Fig. 2.

Fig. 3.

Fig. 4.

Witnesses:
Edward Peck

Inventor.
Nicholas Paul Fenner Jr
by Chas. M. Peck
his Attorney.

No. 782,496. Patented February 14, 1905.

UNITED STATES PATENT OFFICE.

NICHOLAS PAUL FENNER, JR., OF CINCINNATI, OHIO.

WATER-COLUMN.

SPECIFICATION forming part of Letters Patent No. 782,496, dated February 14, 1905.

Application filed March 21, 1904. Serial No. 199,136

To all whom it may concern:

Be it known that I, NICHOLAS PAUL FENNER, Jr., a citizen of the United States, residing at Cincinnati, in the county of Hamilton and State of Ohio, have invented certain new and useful Improvements in Water-Columns, of which the following is a full, clear, and exact description, reference being had to the accompanying drawings, forming part of this specification.

My invention relates to that class of water-columns which have a loose-jointed connection between the delivery-spout which conveys the water into the tender-tank of a locomotive and a projecting curved spout extending from the head of the stand-pipe of the column, the delivery-pipe being so coupled by a loose telescopic joint to the curved spout and supported by novel means extending from the stand-pipe that it can swing with its delivery end practically in a vertical plane from its highest to its lowest position, thus accommodating it to tenders of different height and giving it a wide range of action.

The novelty of my invention will be hereinafter more fully set forth, and specifically pointed out in the claims.

In the accompanying drawings, Figure 1 represents in side elevation a water-column, partly in section and partly broken away, sufficient, however, being shown to illustrate the application of my invention thereto. Fig. 2 is a detail side elevation of a modification of the spout-support. Fig. 3 is a plan view of the engaging loop secured to the column-swinging bracket which supports the spout, and by means of which the person on the tender can grasp and swing the spout and column to bring the spout over the filling-hole in the tender, and where the column is not an automatic-return column he can swing it back to bring the spout out of the line of and parallel with the track. Fig. 4 is a view corresponding to Fig. 2, representing a still further modification in the means for supporting the discharge-pipe.

The same letters of reference are used to indicate identical parts in all the figures.

A represents the base of the stand-pipe, from which extends upward the column B, turning thereon at C, preferably by automatic means of old and well-known construction, to swing the column and its discharge-pipe away from and parallel with the track when not in use and which permits the column to be swung in the opposite direction to bring the discharge-pipe over the track, so that its outer end may be lowered after being projected to engage the intake-hole of the tank on the tender. At the top of the column B is suitably secured a laterally and downwardly projecting coupling-nozzle D, over which is loosely fitted the inner end of the final discharge-pipe E, with the usual or any suitable downwardly-curved spout F, intended to come directly over the manhole or intake of the tender when the pipe is properly drawn out and lowered. Secured to an upward continuation of the nozzle D in line with the column B is a laterally-projecting bracket-arm G, in this instance formed of channel-iron and which extends over the nozzle D and in line therewith.

H, with its counterweight-ball I, is the lever mechanism for operating the valve mechanism at the bottom of the column, which valve mechanism is not shown, but is of the usual or any suitable construction.

Secured to the pipe E at or near the middle of its length is a cable J, which passes up over a pulley *a*, pivoted to a vertical arm L, fast to the bracket-arm G, and whose upper end is looped to engage and serve as a guide for the lever H and whose lower end is forked and straddles the pipe E. The cable J extends from the pulley *a* to a pulley *b*, pivoted to a bracket-arm on the bracket-arm G just in rear of the column, over which it passes, and thence extends downward parallel with the column B, and has a weight K attached to its lower end and serving to counterbalance the weight of the pipe E and to slightly overbalance the same. If desired, there may be a pair of cables J, side by side, attached at their front ends to the pipe E and extending over adjacent parallel pulleys *a* and *b*, with the weight K secured to both of them at the rear of the column in order to more readily balance the pipe E.

As a guide and support to the inner end of the pipe E, I provide a curved rod M, whose lower portion is substantially parallel to the

curvature of the discharge-nozzle B and whose ends are bent upward and secured to the bracket-arm G, as shown in Fig. 1, and extending up from the inner end of the pipe E is an arm *d*, encircling the pipe and having its upper ends above parallel and carrying between them a pivoted grooved roller *e*, which rides upon the guide-rod M. In Fig. 1 the pipe E is shown elevated in solid lines, with the roller *e* adjacent to the head of the column, and in dotted lines it is shown projected and lowered for delivering water, with the roller *e* at the opposite side of the guide-rod M, which is looped and serves as a stop to limit the extreme outward movement of the pipe E. The scale in dotted lines in Fig. 1 is intended to represent different degrees to which the discharge end of the pipe E may be raised or lowered, and in this instance the scale graduations represent feet.

Projecting outwardly and downwardly from the outer end of the bracket-arm G is a looped arm or rod N, Figs. 1 and 3, to enable the person on the tender to easily engage the same with a hook or other suitable instrument and draw the column around from its position in which the pipe E is parallel with the track to a position in which said pipe extends over the track and is ready to be drawn outward and downward to a position proper to discharge water into the manhole of a tender without waste or splashing. In Fig. 2 I have shown a modification whereby the guide-rod M′ is secured to the pipe E and the rod *d*′, carrying the roller *e*′, is secured to the bracket-arm G. In Fig. 4 I have shown a still further modification, in which the pendent arms of the guide-rod M² are forked at their lower ends, so as to straddle the pipe on each side thereof, and there is a roller *e*² suitably pivoted on each side of the pipe E to engage the upper curved sides of the guide-arms on both sides of the pipe.

By the foregoing construction I have provided a water-column which is vertically adjustable, which will completely drain itself at all times, and in which there are no accurately-fitted joints to retain water and freeze in winter, which is very easy to operate and which after an operation will resume its normal position, which is very simple in construction and also inexpensive in construction, besides being efficient in action.

Having thus thus fully described my invention, I claim—

1. In a water-column of the character described, the combination of a stand-pipe, an extended discharge-nozzle secured at the head thereof, a bracket-arm likewise secured to the head of the column and extending therefrom above the discharge-nozzle, a discharge-pipe whose inner end is united loosely and telescopically and non-pivotally with said discharge-nozzle so as to be moved freely thereon, mechanism for supporting said discharge-pipe from said bracket-arm in such manner as to permit the movement of said discharge-pipe up and down at its outer end and in and out over said discharge-nozzle at its inner end, substantially as described.

2. In a water-column of the character described, the combination of a stand-pipe, an extended discharge-nozzle secured at the head thereof, a bracket-arm likewise secured to the head of the column and extending therefrom above the discharge-nozzle, a discharge-pipe whose inner end is united loosely and telescopically with said discharge-nozzle so as to be moved freely thereon, a track or way interposed between said bracket-arm and discharge-pipe and secured to either, and a guide-roller engaging said track or way and carried by the member opposite to that to which the track or way is secured, said roller serving to support the pipe and guide it in its movements, substantially as described.

3. In a water-column of the character described, the combination of a stand-pipe, an extended discharge-nozzle secured at the head thereof, a bracket-arm likewise secured to the head of the column and extending therefrom above the discharge-nozzle, a discharge-pipe whose inner end is united loosely and telescopically to said discharge-nozzle so as to be moved freely thereon, a track or way secured to and pendent from said bracket-arm, and a guide-roller secured to the inner end of the discharge-pipe and engaging said track or way, said roller serving to support the pipe and guide it in its movements, substantially as described.

4. In a water-column of the character described, the combination of a stand-pipe, an extended discharge-nozzle secured at the head thereof, a bracket-arm likewise secured to the head of the column and extending therefrom above the discharge-nozzle, a discharge-pipe whose inner end is united loosely and telescopically and non-pivotally with said discharge-nozzle so as to be moved freely thereon, mechanism for supporting said discharge-pipe from said bracket-arm in such manner as to permit the movement of said discharge-pipe up and down at its outer end and in and out over said discharge-nozzle at its inner end, and an extension of said bracket-arm provided at its outer end with engaging means whereby a hooked rod may be employed to swing the column toward or from the tender, substantially as described.

NICHOLAS PAUL FENNER, JR.

Witnesses:
EDWARD PECK,
EDWARD SUSSDORF.

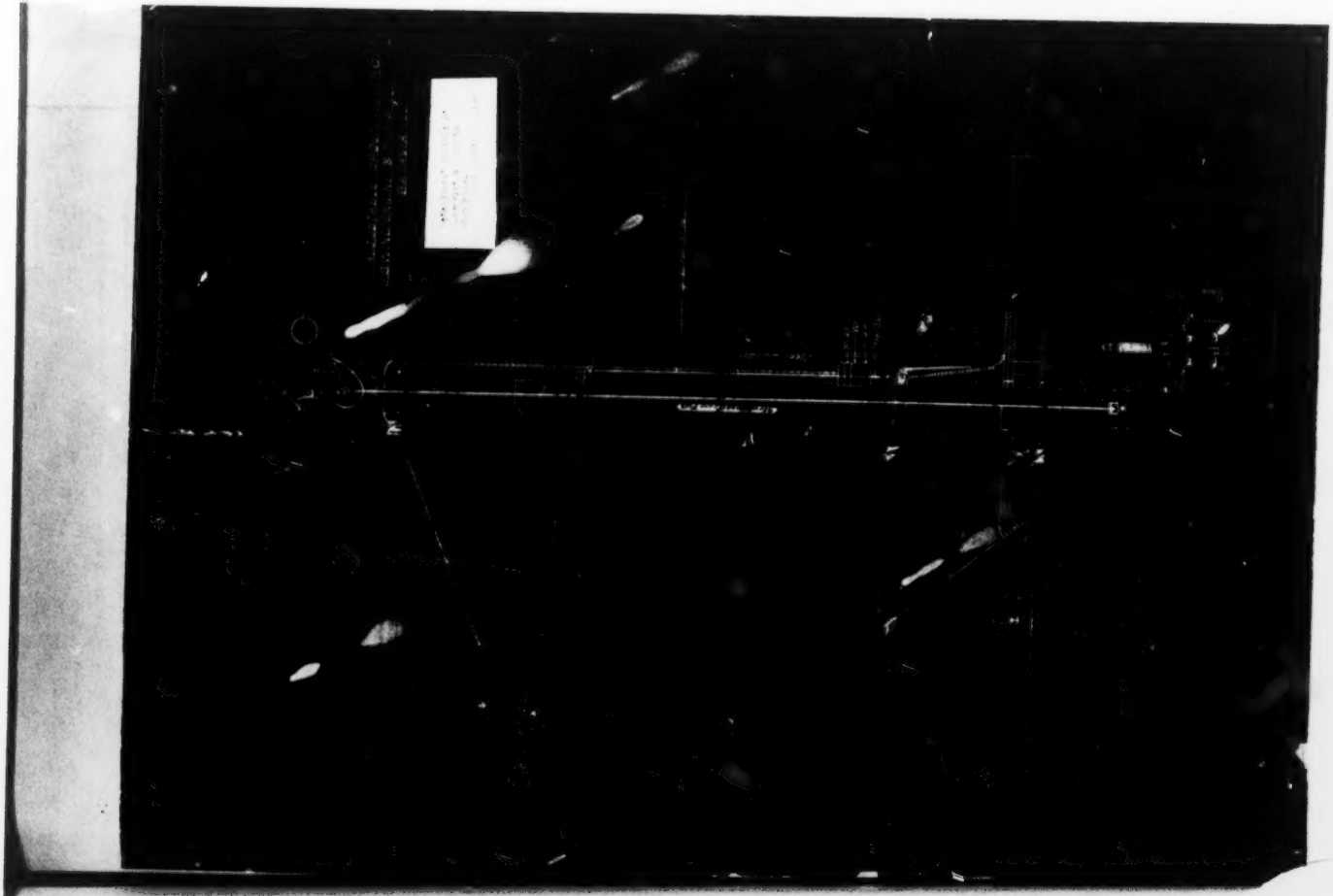

[fols. 144 & 144½] Certificate to foregoing paper omitted in printing.

(Here follows photograph, marked side folio page 145)

[fol. 146] Certificate to foregoing paper omitted in printing.

[fol. 147] Clerk's certificate to foregoing transcript omitted in printing.

(8788)

INDEX.

	Page
Suggestion of diminuation of the record and motion for certiorari	1
These exhibits are a part of the record and important on questions of procedure as well as the merits	3
The exhibits were inadvertently omitted	5
Only pertinent exhibits, like the patents in suit, the Fenner related patent, the file-wrappers, defendants' structures, and important art are submitted	5
Paragraph v of reasons in petition, pointing out refusal to consider matters other than the alleged improperly prepared record, requires the exhibits for understanding of the point	7
Affidavit of Fred L. Chappell	10
Affidavit of service	12
Stipulation waiving time requirements in reference to service of suggestions and objections	13

SUPREME COURT OF THE UNITED STATES

OCTOBER TERM, 1926.

No. 262.

FAIRBANKS, MORSE & COMPANY AND SHEFFIELD CAR COMPANY, PETITIONERS,

vs.

AMERICAN VALVE & METER COMPANY AND EDWARD E. JOHNSON, RESPONDENTS.

SUGGESTION OF DIMINUTION OF THE RECORD AND MOTION FOR CERTIORARI.

To the Honorable Justices of the Supreme Court of the United States:

Now come the above-named petitioners, Fairbanks, Morse & Company and Sheffield Car Company, and suggest that there is diminution of the record herein.

Petitioners move this Court for a writ of certiorari because of such diminution of the record, and that particularly exhibits specified herein be certified to

this Court and added to the record in this cause. The said exhibits are the exhibits specified and indicated on pages 10 and 11 of the record herein, and are a proper part of such record, certified copies of which are herewith submitted:

Plaintiffs' Exhibit C, Photo Sheffield No. 10 Standpipe,

Plaintiffs' Exhibit D, Photo Sheffield No. 11 Standpipe,

Defendants' Exhibit 2, File Wrapper and Contents of Johnson patent (in suit),

Defendants' Exhibit 3, File Wrapper and Contents of Foster patent (in suit),

Defendants' Exhibit 4, File Wrapper and Contents of Fenner patent (concurrent with Johnson and Foster),

Defendants' Exhibit 5, File Wrapper and Contents of Johnson *vs.* Foster Interference (patents in suit),

Defendants' Exhibit 23, Sketch of Plaintiffs' Hayfield Standpipe showing dimensions,

Defendants' Exhibit 24, Poage 1900 Catalog, pages 51, 52, 53, and 54.

Defendants' Exhibit 25, Poage 1902 Catalog, page 2,

Defendants' Exhibit 26, American Valve & Meter Co., 1906 Catalog, pages 22-23.

Copies of Letters Patent as follows:

No. 798,406, F. M. Foster, Aug. 29, 1905 (patent in suit),

818,968, E. E. Johnson, Apr. 24, 1906 (patent in suit),

158,049, Dodge & Palmer, Dec. 22, 1874,

209,861, J. Cantelo, Nov. 12, 1878,
220,580, J. D. Craig, Oct. 14, 1879,
259,457, H. Armington, June 13, 1882,
420,889, H. F. Probert, Feb. 4, 1890,
444,143, A. W. Street, Jan. 6, 1891,
550,737, J. B. White, Dec. 3, 1895,
644,559, J. B. Bartholomew, Sep. 26, 1899,
648,346, J. N. Poage, Apr. 24, 1900.

Also Patent No. 782,496, N. P. Fenner, Feb. 4, 1905 (now decreed invalid), attached to stipulation of counsel, filed and received by the Court of Appeals as a part of the record in this case, as appears by duly certified copy herewith submitted.

Defendants' Exhibit U. S. Blue Print No. 1, attached to affidavit of Laurens E. Wolcott, and later identified as "Defendants' Exhibit 6, Blue Print of Oconto Pipe," offered before the Master on accounting, and identified at page 7 of the record in this Court.

These Exhibits are a Part of the Record and Important on Questions of Procedure as Well as the Merits.

Petitioners show that these exhibits are a part of the record and are highly desirable, and, petitioners believe, are quite necessary to a proper consideration of the questions raised upon the petition for writ of certiorari and the order granting the writ herein.

Should the entire merits of the case be for any reason taken into consideration, which petitioners understand is not now contemplated by the Supreme Court

order herein, these exhibits would be indispensable. They, however, are not urged and offered on the basis that the court will consider the entire merits of the case, but only for consideration on such questions as will properly come up on the matter of procedure under the present order of the court.

Petitioners show that these exhibits were all certified to this Court in the case of Fairbanks, Morse & Company *et al.*, petitioners, *vs.* American Valve & Meter Company et al., respondents, on petition for writ of certiorari, No. 922 of the October Term of 1917, and that record is now on file with this Court. The petition therein was denied April 22, 1918, in memorandum decision reported at 246 U. S. 674, 63 L. Ed., 932. The decision in the case below is reported at 249 Fed., 234.

The petition for certiorari there related to the present cause on the interlocutory decree ordering an accounting, and the present record certified now to this Court is the accounting record in that same case, to which other pertinent proper matters have been added during the progress of the case: viz., a certain item of nineteen disputed standpipes referred to the master by the district court, in addition to those in the accounting; and also an application to the district court under Equity Rule 34 to bring in the decree in a companion case, believed by petitioners to be of peculiar consequence in the consideration of this cause, both on the accounting and on the general features as well.

The exhibits listed in the stipulation at pages 10-11 of the record herein are identified as to page number

by the actual paging of the record certified in the said former petition for certiorari No. 922 of the October Term 1917.

The Exhibits were Inadvertently Omitted.

Petitioners show that these exhibits, to which much evidence appertains, were, through some inadvertence or misunderstanding not possible to explain, omitted from the record, although they are identified as a part of the record and scheduled with others at pages 10-11 of the record herein.

Mr. Dwight B. Cheever, who had final charge of this record, died since submitting the matter.

The inadvertence may have been due to the fact that all of the exhibits were omitted from the printed record and transcript in this case in the court of appeals, for the reason that the same were already in a complete record on file in said court of appeals as the appeal record in the original case (of which this cause is the accounting stage), to which it had been stipulated that reference might be made.

Only Pertinent Exhibits, Like the Patents in Suit, the Fenner Related Patent, the File Wrappers, Defendants' Structures, and Important Art are Submitted.

Petitioners have specified to be included herein only the exhibits and parts of exhibits which will be pertinent and helpful in considering the questions raised on the order of this Court granting the writ of certiorari.

The exhibits are particularly pertinent for the following reasons:

The Johnson Patent, No. 818,968, and the Foster Patent, No. 798,406, are the patents here in suit.

The Fenner Patent, No. 782,496, also owned by plaintiffs, is particularly in question in this case. Plaintiffs made and sold this structure to the exclusion of the Johnson and the Foster. Fenner was differentiated from by the Patent Office in issuing the patents in suit.

The Fenner patent has been declared invalid by an incontestable decree in an independent suit between the parties, important to consider in this case. The decree of invalidity was here offered under Equity Rule 34, which provides for the bringing in of such judgments and decrees at any time. This was simply ignored by the district court, and the appellate court has disregarded defendants' right to have the matter considered.

The file wrappers and contents of the Johnson, Foster and Fenner patents and of the Johnson *vs.* Foster interference are pertinent as showing the relations and scope of these patents, all pertinent to the full issues raised by the certiorari herein.

The Poage Patent, No. 648,346, also owned by plaintiffs, is prominently referred to in all of the file wrappers and contents.

The other exhibits specified are necessary or highly desirable to an understanding of the questions and issues to be discussed.

Paragraph V of Reasons in Petition, Pointing Out Refusal to Consider Matters Other Than the Alleged Improperly Prepared Record, Requires the Exhibits for Understanding of the Point.

The patents in suit, their file wrappers, and the exhibits pertinent to them certainly seem necessary in any event.

Aside from the pertinence as to the complete record, these items bear on the matter of paragraph V of the "Reasons for Application for the Writ and Questions Presented," page 9 of the petition for writ of certiorari, which points out the refusal of the court of appeals to pass on portions and parts of the record properly before it that did not involve a condensed statement of the testimony.

Petitioners, proceeding under Supreme Court Equity Rule 34 as to judgments and decisions that are pertinent to a case, had presented to the district court by petition a request to reopen the case because of the decision of the district court, in a case between the same parties and parties in interest, finding incontestably the invalidity of the said Fenner Patent, No. 782,496.

The standpipe structure of the Fenner patent had been manufactured by plaintiff, American Valve & Meter Company, during the entire life of the Johnson patent and the Foster patent in suit because it was a better structure than the structure of either the Johnson or Foster patents in suit.

It was independently patented as a non-pivotal structure.

The Fenner patent was *prima facie* valid and, of course, not available as a standard of comparison on the accounting except that the patent be considered valid. The validity was attacked in an independent suit between the parties, and it has been held invalid by a Master in Chancery. No exception has been taken by the plaintiffs and a decree of invalidity has been entered which is not open to attack.

This shows that the structure is now proper to be considered as an unpatented structure as a standard of comparison in determining the advantages of the patented structures on the accounting. The ruling also in effect and by unavoidable inference shows fraud and misrepresentation by the plaintiffs in inducing the court to hold that the Johnson patent presented the solution of an important standpipe problem.

The Johnson features claimed, and pointed out by the court of appeals, are entirely absent from this very superior Fenner structure, now held unpatented, as will appear from an examination of the same.

These are questions which petitioners-defendants had the right to submit to the district court. When passed upon by the district court defendants had the right on an appeal from final decree to have the matter considered by the appellate court.

The district court in effect ignored the matter. The court of appeals has refused to look at the matter and has done so with great deliberation. The court said in its opening paragraph:

> "This is an appeal from a decree upon an accounting in a patent suit.

> "Only such evidence as bore upon that matter should have been heard by the master or the court below, and only such evidence should have been made part of the record 'in case of appeal,' and this only in the way the law prescribes."

This wholly unwarranted statement of the court of appeals can only be fully understood by a consideration of the record, including the exhibits in question, which cannot be fully understood without the patents in suit, the proceedings in the Patent Office, and the pertinent art relative thereto. All this is pertinent to be understood by this Court, so that if the matter is proper to be considered this Court can direct its consideration along with the record, which is being insisted upon by petitioners herein as a proper record, although refused consideration by the court.

Wherefore your petitioners pray that a writ of certiorari be issued out of and under the seal of this Court directed to the United States Circuit Court of Appeals for the Seventh Circuit, commanding the said court to certify and send to this Court the said exhibits herein enumerated.

FRED L. CHAPPELL,
Attorney for Petitioners.

HOWARD M. COX,
CARROLL J. LORD,
Of Counsel.

NOVEMBER 24, 1927.

IN THE UNITED STATES SUPREME COURT,

WASHINGTON, D. C.

OCTOBER TERM, 1926.

No. 262.

FAIRBANKS, MORSE & COMPANY and SHEFFIELD CAR COMPANY, *Petitioners,*

vs.

AMERICAN VALVE & METER COMPANY and EDWARD E. JOHNSON, *Respondents.*

AFFIDAVIT OF FRED L. CHAPPELL.

STATE OF MICHIGAN,
County of Kalamazoo, ss:

Fred L. Chappell, being duly sworn, deposes and says that he is counsel for Fairbanks, Morse & Company, and has been such counsel since the beginning of this litigation, and is counsel in various other litigations involving the same matters for Fairbanks, Morse & Company.

Deponent states that he is the only counsel having had experience for Fairbanks, Morse & Company in all of such litigations and is the only counsel having first hand information as to such matters.

Deponent states that the foregoing suggestion of diminution and petition for certiorari calls for matter to be added to the record which in deponent's opinion

is necessary to properly understand the issues in the case. Deponent states that the matters offered are copies of the exhibits which it is desired to bring into the record in this case.

Deponent states that the exhibits herein are all in the record in the original case herein, decision reported at 249 Fed. Rep., 234, and that the same were all certified to this Court by the clerk of the United States Circuit Court of Appeals for the Seventh Circuit, in connection with the said former petition for writ of certiorari, Fairbanks, Morse & Company et al., petitioners, *vs.* American Valve & Meter Company et al., respondents, No. 922 of the October Term, 1917, reported as denied at 246 U. S. 674, 63 L. Ed., 932.

Deponent states that the said exhibits are material and of consequence for reasons stated herein in the "petition for writ of certiorari and reasons therefor."

Deponent further states that this motion is not filed for purposes of delay.

FRED L. CHAPPELL.

Subscribed and sworn to before me this 22nd day of November, 1927.

[SEAL.] LUELLA G. GREENFIELD,
Notary Public in and for said County and State.

My commission expires May 17, 1931.

UNITED STATES SUPREME COURT.

October Term, 1926.

No. 262.

Fairbanks, Morse & Co. et al., *Petitioners*,

vs.

American Valve & Meter Co. et al., *Respondents*.

State of Michigan,
County of Kalamazoo, ss:

Luella G. Greenfield, being duly sworn, deposes and says that she is employed in the office of Fred L. Chappell, counsel for petitioners, in the above cause; that she served on counsel for respondents copy of petitioners' "Suggestion of Diminution of the Record and Motion for Certiorari," by depositing said copy in the mail at Kalamazoo, Michigan, on November 22, 1927, in an envelope addressed: Mr. Frank A. Whiteley, First National-Soo Line Building, Minneapolis, Minn., the postage thereon being fully prepaid.

LUELLA G. GREENFIELD.

Subscribed and sworn to before me this 30th day of November, 1927.

[seal.] JESSIE M. DOTY,
Notary Public in and for said County and State.

My commission expires August 8, 1929.

UNITED STATES SUPREME COURT.

October Term, 1926.

No. 262.

Fairbanks, Morse & Co. and Sheffield Car Company,
Petitioners,

vs.

American Valve & Meter Co. and Edward E. Johnson, Respondents.

STIPULATION WAIVING TIME REQUIREMENTS IN REFERENCE TO SERVICE OF "SUGGESTION AND MOTION" AND OF OBJECTIONS THERETO.

Stipulation.

It is stipulated by and between counsel for the respective parties, that time requirements in reference to service of suggestion and motion and of objections thereto be, and hereby are, waived, to the end that the court may give the matter immediate consideration.

Kalamazoo, Michigan, November 30, 1927.

FRED L. CHAPPELL,
Counsel for Petitioners.

F. A. WHITELEY,
Counsel for Respondents.

Minneapolis, Minn., November 25, 1927.

Office Supreme Court, U. S.
FILED
FEB 21 1928
CHARLES ELMORE CROPLEY
CLERK

Supreme Court of the United States

OCTOBER TERM, 1927.

No. 262.

FAIRBANKS, MORSE & COMPANY, AND SHEFFIELD CAR COMPANY, *Petitioners,*

vs.

AMERICAN VALVE & METER COMPANY, AND EDWARD E. JOHNSON, *Respondents.*

PETITION TO ADMIT AND CONSIDER AFFIDAVIT. AFFIDAVIT OF FRANK A. WHITELEY.

F. A. WHITELEY,
Attorney for Respondents.

Hayward Brief Company, 601-607 Fourth Ave. So., Minneapolis

Supreme Court of the United States

OCTOBER TERM, 1927.

No. 262.

FAIRBANKS, MORSE & COMPANY, AND SHEFFIELD CAR COMPANY, *Petitioners*,

vs.

AMERICAN VALVE & METER COMPANY, AND EDWARD E. JOHNSON, *Respondents*.

PETITION TO ADMIT AND CONSIDER AFFIDAVIT.

In view of the affidavit of Howard M. Cox, filed in connection with the brief of Petitioners on Order to Show Cause herein, it is respectfully requested that the annexed affidavit of Frank A. Whiteley be filed and considered.

F. A. WHITELEY,
Attorney for Respondents.

SUPREME COURT OF THE UNITED STATES.

OCTOBER TERM, 1927.

No. 262.

FAIRBANKS, MORSE & COMPANY, AND SHEFFIELD CAR COMPANY, *Petitioners*,

vs.

AMERICAN VALVE & METER COMPANY, AND EDWARD E. JOHNSON, *Respondents*.

AFFIDAVIT OF FRANK A. WHITELEY.

State of Minnesota,

ss.

County of Hennepin.

Frank A. Whiteley, being first duly sworn, deposes and says as follows:

I am counsel for Respondents in the above entitled cause. On Friday, February 17th, at two o'clock P. M., there was received from the postoffice, brief of the Petitioners (Appellants) and an accompanying affidavit of Howard M. Cox. This affidavit is no part of the record before the Court, or of the brief called for by the Order to Show Cause herein, is new matter, and came to the attention of affiant only as above stated. It sets up certain facts in part only, and, if this Court is disposed to consider those facts at all, it should have them before it and consider them in their entirety. It is true, as stated in Mr. Cox's affidavit, that "there was similar handling of about a dozen other patent suits." That is, the Court of Appeals had affirmed the decision of the District Court on the ground that the record was not prop-

erly made up as required by Rule 75 (b) and, hence, that there was no evidence before the Court of Appeals; and thereafter had granted a petition for re-hearing together with leave to "withdraw the transcript of record in this cause for a period of thirty (30) days," just as it did in this case. Affiant is informed and believes, and states the fact to be, that in every case, excepting that of the Petitioners here, the transgressing appellants accepted and acted upon the permission given by the Court of Appeals, withdrew, corrected and re-filed the transcripts and obtained re-hearing of their cause by the Court of Appeals.

This affiant discussed the matter with a number of the counsel who took this action and the general belief of counsel was that, in view of decisions of Circuit Courts of Appeals, some of which are cited in this Court's opinion, in *Barber Asphalt Paving Co. vs. Standard Asphalt & Rubber Co.*, there could be no question but what the District Court had the power to take jurisdiction to supply a new transcript made up in accordance with the Rule, when the Court of Appeals surrendered jurisdiction by permitting withdrawal of the old transcript. No lawyer with whom affiant discussed the matter ever suggested that Rule 76 could be used in that situation, and this affiant has no knowledge that any one other than counsel for Petitioners here, in connection with its proceedings before the Court of Appeals for the Seventh Circuit, ever suggested or supposed that Rule 76 could have anything to do with the matter.

FRANK A. WHITELEY.

Subscribed and sworn to before me this 18th day of February, 1928.

ANNIE M. ROYAL,
Notary Public.

State of Minnesota,

ss.

County of Hennepin.

F. A. Whiteley, being duly sworn, deposes and says that he is attorney of record for Respondents in the above proceeding; that on February 18, 1928, he caused to be transmitted by registered mail to F. L. Chappell, 531 West Main Street, Kalamazoo, Mich., attorney for Petitioners, a copy of the within affidavit.

FRANK A. WHITELEY.

Subscribed and sworn to before me this 18th day of February, 1928.

ANNIE M. ROYAL,
Notary Public.

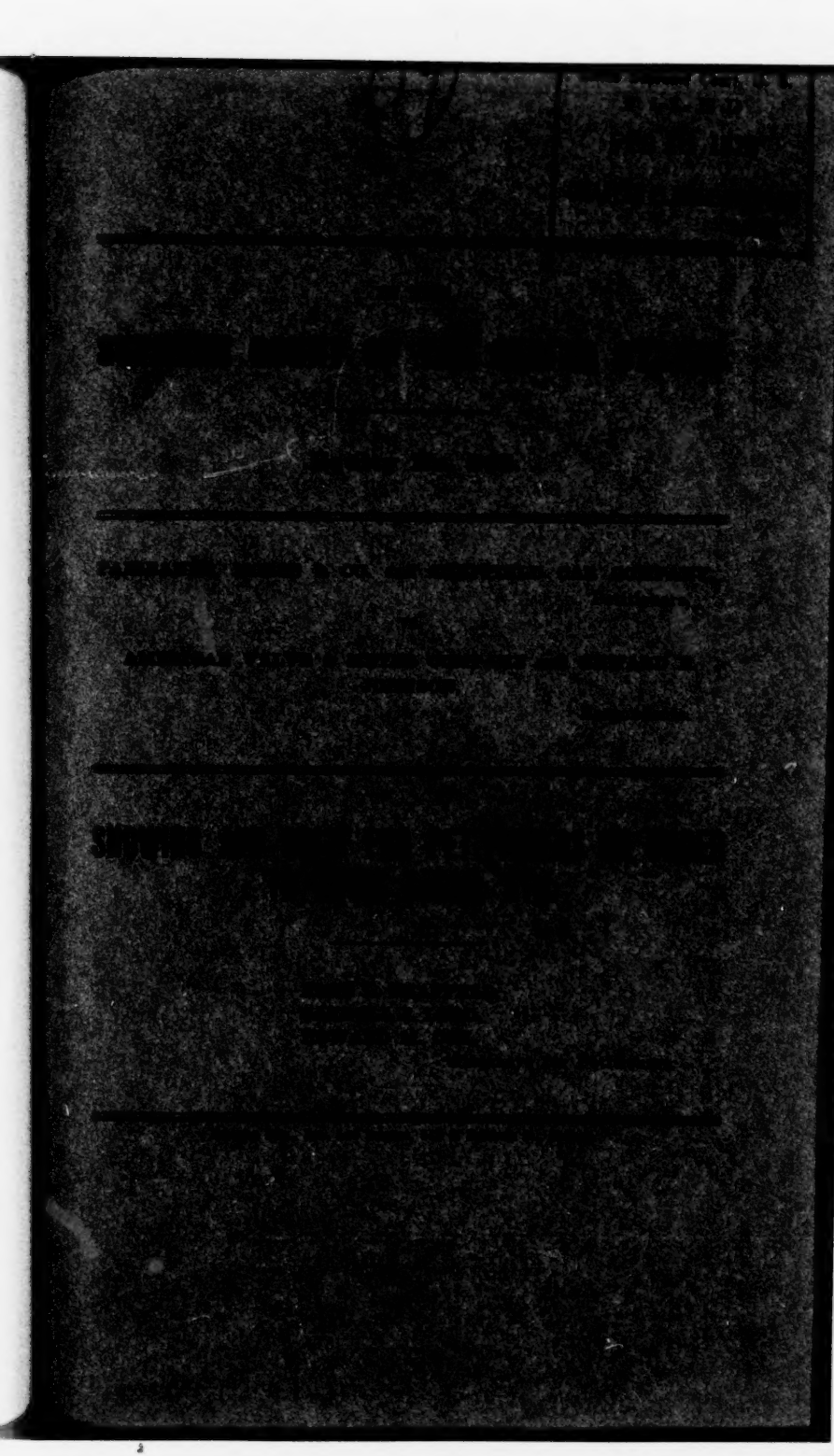

INDEX.

Short statement of showing by petitioners-defendants 1
Opinion below 3
Jurisdiction of the court 3
Statement of the case 3
Assignments of error upon which petitioners intend to rely 12
Summary of points presented and authorities 12
Argument 13
Petitioners are entitled to have this case remanded to the Circuit Court of Appeals for consideration upon its merits 13
No penalty should be imposed 13
Conclusion 23
Appendix A, Affidavit of Howard M. Cox 27

Cases Cited.

American Valve & Meter Co. *v.* Fairbanks, Morse & Co., 249 Fed. 234 4
Barber Asphalt Co. *v.* Standard Asphalt & Rubber Co., Case No. 194, decided January 3, 1928 ..... 5, 12

IN THE

SUPREME COURT OF THE UNITED STATES

Equity No. 262.

FAIRBANKS, MORSE & CO. and SHEFFIELD CAR COMPANY,
Petitioners,

vs.

AMERICAN VALVE & METER COMPANY and EDWARD E. JOHNSON,
Respondents.

SHOWING AND BRIEF FOR PETITIONERS ON ORDER TO SHOW CAUSE, ETC.

Short Statement of Showing by Petitioners-Defendants.

Petitioners, responding to the order of this Court of January 9, 1928, to show cause

> "why the decree entered by the Circuit Court of Appeals should not be reversed and the cause remanded to that court for further proceedings in conformity with the rulings recently made in the case of *Barber Asphalt Paving Co.* v. *Standard Asphalt & Rubber Co.*, No. 192, October Term, 1927, opinion announced January 3, 1928, in reference to the operation of rule 75 (*b*), and to the payment, by way of reimbursement

for expenses and counsel fees, occasioned by the fault of one or the other parties herein through the disregard of rule 75 (*b*),"

respectfully show:

I. That the case should be reversed and remanded for hearing on the record as it stands in the United States Circuit Court of Appeals for the Seventh Circuit.

The record in all particulars complies with Equity Rule 75 and 75 (*b*) and all other rules and statutes.

Further, the record is a stipulated record. The record is condensed as required as to all parts of the testimony that had not been previously printed under the statute in the court below, except the testimony of four of plaintiffs-respondents' witnesses, which was reproduced in full because desired by plaintiffs-respondents' counsel and concurred in by defendants-petitioners' counsel, for reasons stated and approved by the District Court as required by Equity Rule 75 (*b*).

II. That no terms should be imposed upon petitioners. Petitioners in good faith have complied with every rule of court and of the statutes. Further, petitioners prepared and produced an appeal record so satisfactory to respondents that it was stipulated to by their counsel without any objection, because the whole was worked out and agreed to in advance by counsel for both parties.

III. That the costs of this certiorari proceeding are within the discretion of this Court. Petitioners submit that the action of the United States Circuit Court of Appeals for the Seventh Circuit was spontaneous and of its own motion. The refusal of the Court to consider the record was not due to any motion or action or argument of respondents. However, defendants-petitioners have been caused heavy expense in this behalf through no fault of theirs, and costs might very well be imposed on respondents or in the alternative be left to abide the final decision of the case.

Opinion Below.

The opinion of the said Circuit Court of Appeals is reported in 18 Fed. (2d), 716. It also appears in the record (p. 580).

Jurisdiction of the Court.

The judgment pursuant to said opinion to be reviewed is dated December 22, 1926 (R. 584-85).

The same was vacated on petition to rehear and other proceedings had and thereafter both the opinion and the judgment were reinstated by order of the Court, April 13, 1927 (R. 632-33).

This Court has jurisdiction under United States Code, Sec. 347 (former Judicial Code, Sec. 240).

Page references to the record in this brief are to the transcript of record prepared in accordance with petitioners' motion of May 12, 1927.

Statement of the Case.

This suit involves two patents, Johnson No. 818,968, April 24, 1906, and Foster No. 798,406, August 29, 1905, relating to standpipes for supplying water to railway locomotives.

The suit in which the decree to be reviewed was entered was brought by the respondents against the petitioners in the District Court of the United States, for the Northern District of Illinois, Eastern Division, on October 30, 1915, respondents claiming infringements of the above patents by reason of the manufacture and sale by petitioners of a railway standpipe designated as, "Sheffield No. 11."

The District Court, upon consideration of the case, dismissed the same for want of equity on July 20, 1916, from which decision respondents appealed to the United States Circuit Court of Appeals where the decision of the District Court was reversed in the case of *American Valve & Meter Co.* v. *Fairbanks, Morse & Co.*, 249 Fed. 234. The case was remanded to the District Court for an accounting before the Master.

As the result of the accounting before the Master, a final decree was entered by the District Court on March 8, 1926, awarding respondents the sum of $97,869.98 (R. 523).

Petitioner duly appealed to the United States Circuit Court of Appeals for the 7th Circuit, which appeal was allowed the 20th day of March, 1926 (R. 550). Upon the hearing of this appeal, the same was in effect dismissed on order of affirmance without consideration of the merits of the case (except upon the question of petitioners' liability for compensation of accountants and interest), because of an alleged failure of petitioners to properly condense the testimony within the requirements of Equity Rule 75 promulgated by this Court (18 Fed. (2d), 716).

The appeal in the instant case was in effect dismissed by the Court of Appeals shortly after that Court had dismissed the appeal in the Barber Asphalt Company case for like reasons, that being case 194 of this Court, which was decided January 3, 1928, by this Court.

The subject-matters to be considered under the order of this Court, entered January 9, 1928, are as follows:

First. Whether the decree entered by the United States Circuit Court of Appeals in this case should be reversed and the cause remanded to that Court for further proceedings in conformity with the rulings of this Court recently made in the case of Barber Asphalt Paving

Co. v. Standard Asphalt and Rubber Co., No. 194, October Term, 1927, opinion announced January 3, 1928.

Second. Whether expenses and counsel fees should be imposed as a penalty on either of the parties hereto through the disregard of Rule 75b.

It is assumed that this case will be and should be controlled by the decision in the *Barber Asphalt Co.* v. *Standard Asphalt & Rubber Co.* case, No. 194, decided by this Court January 3, 1928, in so far as it applies to the question of remanding. In other respects, however, the case is at total variance with the facts in the Barber case.

The Court of Appeals for the Seventh Circuit, in the instant case, as in the Barber case, rejected the evidence on the ground that there was a failure to comply with Equity Rule 75 and that, consequently, there was nothing before the Court of Appeals in the way of evidence to consider; hence, the appeals in both this and the Barber case were, in effect, dismissed.

The present case is very different from the Barber case in that in the Barber case there was no attempted condensation of the record and compliance with Rule 75. In the instant case, we urge that *there was compliance*, in addition to which *the record was agreed to by stipulation of the parties, approved by the District Judge and by a Judge of the Court of Appeals speaking for that Court.*

In the present case it was respondents' contention that the standpipe designated as "Sheffield No. 11" which was manufactured by petitioners, infringed the Johnson and Foster patents. After the decision of the United States Circuit Court of Appeals (249 Fed. 234), holding that petitioners' standpipe No. 11 infringed these patents, petitioners discontinued the manufacture of this standpipe and materially changed the design, which resulted in a structure substantially the same as the standpipe designated as "Sheffield No. 12" which became the sub-

ject-matter of litigation in case No. 1191, hereafter referred to.

This modified structure was not given any particular name in the litigation but was made under the patents to Thompson (R. 554) and to Thompson & Bunn (R. 560) and thirteen of these structures were sold by petitioners.

Respondents, plaintiffs below, then brought contempt proceedings on the theory that these thirteen nameless standpipes were also an infringement and within the scope of the decree (R. 405-453). The standpipes involved in the contempt proceeding omitted the pivoted arms and links of the Johnson and Foster patents, but the lug to which they were attached for some reason was not removed from the upright casting. Later, the contempt proceedings were dismissed without prejudice and the question of whether the said thirteen standpipes were within the terms of the decree was referred to the Master (R. 405-453). The Master found these thirteen standpipes were within the terms of the decree and hence were manufactured in contempt of the decree (R. 461-462) and consequently ruled, which was later upheld by the Court, that these thirteen standpipes should be the basis of accounting and as a matter of fact were included in the accounting and hence this contempt proceeding became a proper and necessary subject for appeal with the rest of the case.

Petitioners, defendants below, then proceeded to manufacture and sell the standpipe designated as "Sheffield No. 12." Thereupon respondents instituted another suit in the District Court of the United States, for the Northern District of Illinois, against petitioners, alleging that petitioners' standpipe, Sheffield No. 12, infringed the Johnson patent and another patent which had been acquired by respondents, known as the "Fenner" patent. This case was known as case No. 1191.

The structure, Sheffield standpipe No. 12, was very like the structures involved in the contempt proceedings with the said lug omitted. Both structures were made under the defendants' patents to Thompson and Thompson & Bunn.

Suit No. 1191 included the Johnson patent here in suit and also the Fenner patent which was owned during the entire infringing period by the respondent American Valve & Meter Company. The structure of the Fenner patent had no links or arms and is provided with a track and roller connection between the spout and the standpipe. The Fenner structure contained all the valuable features of the Johnson patent except the pivoted arms or links of the said Johnson and Foster patents in suit, and is admittedly and beyond question the best standpipe structure that had been produced up to the time of production of the Sheffield No. 12 standpipe held to infringe the Johnson patent in said case 1191.

The Master found the Fenner patent totally invalid. No exception was filed to his finding and decree was accordingly entered by the Court, holding the patent invalid, which decree, we submit, is incontestable. The Fenner structure thereby becomes a proper standard of comparison in the accounting, as it was open to public use.

Therefore, it appears that the plaintiffs have been guilty of a technical fraud in claiming advantages for the pivoted arms or links of Johnson and Foster, when plaintiff was manufacturing successfully a structure which contained no such devices (now held to be unpatented) which plaintiff knew to be superior to the structure of either the Johnson or Foster patents.

These matters are all properly in the record, and we respectfully submit that the defendants-petitioners are entitled to a review of the questions here raised.

Case No. 1191 was referred to the same Master in Chancery who was then hearing the evidence in the accounting proceedings in this case.

For purposes of convenience and to expedite the hearing of case No. 1191, as well as the accounting proceedings, it was agreed between counsel for petitioners and respondents that a portion of the evidence which had been heard in the original infringement case, should be introduced in case No. 1191 and in instant case upon the accounting as *stipulated testimony*. To this end, the agreed testimony was compiled and printed at the joint expense of both parties and this printed volume of stipulated testimony was introduced in evidence before the Master in case No. 1191 and in the instant case upon accounting. This printed volume of *stipulated testimony* contains 98 pages of *condensed* testimony, being the testimony condensed on the original appeal to the United States Circuit Court of Appeals (R. 12-76; 280 to 312) and 154 pages of testimony in question and answer form. (R. 76 to 161; 312 to 369).

At the time the record was being prepared in the instant case for appeal to the United States Circuit Court of Appeals from the final judgment of the District Court, counsel for both petitioners and respondent, construed the Act of February 13, 1911, U. S. C. Title 28, Sec. 865, to authorize the incorporation of this printed volume of stipulated testimony in the record on appeal in the identical form as introduced in evidence before the Master and without the requirement of further condensation. The record on appeal to the United States Circuit Court of Appeals was prepared on stipulation of counsel, and this printed volume appears as Item 2 of the stipulation as to contents of the record on appeal (R. 5).

Upon the accounting proceeding before the Master, eleven witnesses testified orally and the testimony of

these witnesses occupies about 150 pages of the transcript of record (R. 162-279; 371-404). *The testimony of seven of the eleven witnesses is condensed* (R. 162-173; 209 to 245; 257-259; 277-279; 371-404). This consists of *about 97 pages of the record.*

Of the oral evidence adduced before the Master upon the accounting proceeding, the testimony of four witnesses is set out in full (R. 174-208; 245-256; 259-277). This testimony could not be materially condensed and retain its meaning and it was, therefore, stipulated by counsel and agreed to by the District Court that this testimony should appear in the record on appeal in its original form. There are only about 53 pages of this uncondensed testimony in the record.

With the exception of the stipulated and oral testimony as referred to above, the record consists of matters which cannot properly be condensed and are not within the purview of Equity Rule 75. These matters consist of pleadings, orders of the Court, the Master's report, exceptions to the Master's report, affidavits and other papers considered in the contempt proceedings, motions, exhibits, etc.

After the preparation of the transcript of record by stipulation of counsel, the same was approved by the District Court (R. 5), certified to by the clerk of the District Court (R., p. 567), and, by order of the District Court, was directed to be certified to the United States Circuit Court of Appeals (R. 551).

The transcript of record was approved by the District Court in the following language:

> "I hereby approve and certify the attached stipulation and record as a full transcript of the necessary record in this cause and the statement of evidence therein, as a full statement so far as necessary to review the said cause on appeal; and on motion and stipulation of counsel for the parties, I further cer-

tify that in so far as the testimony is therein given by question and answer, it was necessary to so state it for a proper and full understanding thereof.

(Signed) ADAM C. CLIFFE,
U. S. District Judge."

(R. 5.)

After the transcript of record had been certified by the District Court to the Circuit Court of Appeals, and before printing the same, counsel for petitioners on May 17, 1926, submitted the record, as thus prepared, to the Court of Appeals for approval and the Court very properly approved the same, the order reciting that the record was approved "as a sufficient compliance with the equity rules." This order was entered by Honorable Evan A. Evans, Circuit Judge (R. 571). Thereupon, the record was filed with the clerk of the United States Circuit Court of Appeals, and was printed under his direction.

On November 17, 1926, the appeal having come on in due course for argument before the Honorable Samuel Alschuler, Evan A. Evans and Albert B. Anderson holding the United States Circuit Court of Appeals for the 7th Circuit, said cause was fully argued on the merits by counsel for both parties, upon questions raised by the assignments of error without any question as to the condition of the record, and having been submitted upon the approved transcript of the record was taken under advisement by the Court.

On December 22, 1926, and notwithstanding this submission of the cause upon the merits, the United States Circuit Court of Appeals for the 7th Circuit, *entirely ignoring its own order* of May 17, 1926, approving and accepting the transcript filed on that date, handed down an opinion in said cause (App. A-C., R. 580), deciding the cause upon two points said not to require evidence, but holding that counsel had no right to stipulate as to any

evidence or contents of record and that the evidence not being properly before the Court, the main questions raised by the assignments of error could not be determined, and thereupon, affirming the decree of the lower court, without any consideration of that decision upon the merits of the main cause and without giving your petitioners any opportunity to revise under the further directions of the District Court, the statement of evidence which both the District Court and your petitioners had theretofore believed to be in form acceptable to the Circuit Court of Appeals, and which the order of the Circuit Court of Appeals of May 17, 1926, had approved.

Thereafter, on January 11, 1927, your petitioners filed in the United States Circuit Court of Appeals for the 7th Circuit their petition for rehearing (R. 586), praying said Court to reconsider and decide this cause upon the merits. The petition which did not request permission to file a new transcript, concluded with a formal, written statement by counsel that they did not know how a more compact or concise record could be prepared to bring before the Court of Appeals the questions heard by the District Court (R. 609).

On January 20, 1927, the Circuit Court of Appeals granted said petition but attached to the order permission to withdraw the transcript for thirty days, no purpose therefor being indicated (R. 622).

Your petitioners being wholly unadvised by the original opinion of the Circuit Court of Appeals or by the allowance of the petition for rehearing, what changes, if any, in the Transcript of Record could or should be made to satisfy the views of the various members of the Court of Appeals *without cutting out matter believed to be properly before the Court for decision*, and the term of the District Court at which the appeal was allowed having long since expired, your petitioners [illegible] the Court of Appeals to use Equity Rule 75 to restore jurisdiction

on the District Court and to tell that Court what, if any, changes it should make in said previously certified and accepted Transcript of Record. On February 11, 1927, the motion was denied (R. 630).

On April 13, 1927, the Circuit Court of Appeals entered an order withdrawing its grant of rehearing and restoring its original opinion of December 22, 1926 (R. 632). On motion the mandate was stayed, pending proceedings in this Court.

Assignments of Error Upon Which Petitioners Intend to Rely.

1. The Circuit Court of Appeals erred in dismissing, in effect, petitioners' appeal without consideration of the merits of the case.

Summary of Points Presented and Authorities.

POINT I.

Petitioners are entitled to have this case remanded to the Circuit Court of Appeals for consideration upon its merits.

Barber Asphalt Paving Company v. *Standard Asphalt & Rubber Company* (being case No. 194, decided by this Court January 3, 1928).

Act of February 13, 1911, U. S. C. Title 28, Section 865:

"Either the Court below or the Circuit Court of Appeals may order *any original document or other evidence to be sent up in addition to the printed copies of the record or in lieu of printed copies of a part thereof;* and no written or typewritten transcript of the record shall be required." (Our italics.)

POINT II.

No penalty should be imposed.

ARGUMENT.

I.

Petitioners Are Entitled to Have This Case Remanded to the Circuit Court of Appeals for Consideration Upon Its Merits.

Petitioners respectfully contend that under the authority of the Barber case, decided at the present term of this Court, they are entitled to have this case remanded to the Circuit Court of Appeals with directions to reconsider the appeal upon the merits.

II.

No Penalty Should Be Imposed.

Petitioners further contend, in view of the substantial condensation of testimony appearing in the record, the approval of the same by the District Court, and a judge of the Court of Appeals, and the further fact that the record is one stipulated and agreed upon between *counsel for both of the parties* hereto, that no penalty should be imposed on petitioners, as was done in the Barber case.

The only substantial amount of testimony that petitioners failed to condense is that appearing in the volume of STIPULATED TESTIMONY, which, for convenience of the Master and the trial court, was printed and offered in evidence in that form before the Master on the hearing in the accounting proceedings and in companion case, No. 1191. Petitioners believe this was proper under the Act of February 13, 1911, U. S. C., Title 28, Sec. 865, which authorizes the incorporation in the record on appeal of original documents as introduced in the lower court without reprinting the same.

Petitioners desire to point out the fundamental differ-

ences between the record in the instant case and the Barber case. There is not the remotest similarity between this and the Barber case in the manner in which appellant took up the record.

In order to make a ready comparison, we give an outline below in parallel columns of the proceedure adopted in the two cases, the data regarding the Barber case being taken from the opinion of this Court of January 3, 1928:

The Barber Case.	*The Instant Case.*
1. "Appellant on its own responsibility prepared, printed and lodged with the Clerk for certification a proposed transcript."	1. Appellants and appellees co-operated in preparing and filing the transcript and approved it by stipulation (R. 5-8).
2. "This transcript was in nine volumes, about 5,000 pages, and consisted mostly of evidence set forth without any approval or authentication by the Court or Judge and without appreciable attempt at condensation or narration, save as some exhibits may have been omitted."	2. The transcript was in *one* volume of only 539 pages, exclusive of the patent copies forming defendants' exhibits. Not only was there "appreciable attempt at condensation or narration," but also there was a very extensive condensation and r e d u c t i o n to narrative form. There were only about two hundred pages of uncondensed testimony, of which one hundred and fifty pages consisted of stipulated testimony taken in the previous case, which had already been printed

The Barber Case.

The Instant Case.

for convenience on the hearing before the Master in this case and companion case No. 1191, and this was introduced in evidence before the Master as a printed volume of stipulated testimony. Therefore, this was not only a small record for a patent case, but in reality was largely condensed and was in compliance with the rule.

3. Apparently the transcript was prepared, printed and lodged with the Clerk of the Court without submission to appellee for approval.

3. In contrast with the Barber case, after the transcript had been prepared in the instant case by agreement of counsel, it was submitted to Judge Cliffe of the District Court and approved by him in the following language:

"I hereby approve and certify the attached stipulation and record as a full transcript of the necessary record in this cause and the statement of evidence therein, as a full statement so far as necessary to review the said cause on appeal; and on motion and stipulation of counsel for the parties I further certify that in so far as the testimony is therein given by

The Barber Case.

4. The transcript, without approval of appellee or certification of the Judge of the District Court, was filed with the Clerk of the Circuit Court of Appeals.

The Instant Case.

question and answer, it was necessary to so state it for a proper and full understanding thereof." (R. 5.)

4. In the instant case after the transcript had been certified to the Circuit Court of Appeals, and before printing or filing the same with the clerk of that Court, counsel for appellants presented the transcript to the Honorable Evan A. Evans, United States Circuit Judge (R. 571), and he approved the same in the following language:

"For satisfactory reasons appearing to the Court and by agreement of counsel for the respective parties in the above entitled cause, it is hereby Ordered as follows:

"The transcript of record, as made up and certified by the Clerk of the District Court, pursuant to the stipulation of the parties approved by the Court and filed with said Clerk on May 10, 1926, and as filed with the Clerk of this Court of Appeals on May 17, 1926, *is hereby received as a sufficient compliance with the Equity Rules relating to*

The Barber Case.	*The Instant Case.*
	the preparation of records for appeal, and said transcript, as agreed upon by the parties hereto, constitutes the appeal record in this cause." (Our italics.)
5. Appellee, by motion filed in ample time, objected to the transcript as filed with the Clerk of the Court of Appeals, "and in that connection suggested (*a*) that all evidence appearing in the transcript be stricken therefrom because not stated in simple and condensed form and, where consisting of the testimony of witnesses, was not stated in narrative form, but set forth in full in the original form contrary to Rule 75*b* of the Equity Rules, and (*b*) that the evidence received at the hearing which resulted in the interlocutory decree be stricken from the transcript for the further reason that it was not approved or authenticated by the the court or judge as required by that rule."	5. Appellees never objected to the form of the record, but, on the contrary, gave their approval by written stipulation (R. 5-8; 618-619).
6. Thereafter, "at the appellant's instance, the Court of Appeals remitted the transcript to the District Court to enable it to 'amend its certificate of evidence' and to make 'such further amendment, correction or amplification as the district judge may, upon	6, 7, 8. The Court of Appeals *sua sponte* issued an order permitting withdrawal of the record for thirty days, the inference being that appellants would have an opportunity to make changes, but the value

The Barber Case.

his attention being brought to the matter, see fit to make respecting the certification of the record.' In this order the Court of Appeals expressly retained jurisdiction of the appeal, directed that the transcript when corrected be returned to that court and reserved all questions respecting the validity and effect of the correction until the hearing on the merits."

7. Thereafter, "the appellant presented to the District Court a motion asking it to 'append its certificate of evidence' to the remitted transcript and further to amend, correct or amplify the certification of the record as it might deem proper. The appellee had due notice of this motion, appeared specially for the sole purpose of challenging the Court's power to grant the motion, and declined to take any further part in that proceeding."

Thereupon, the Court, after inquiry, found that the "evidence was truly and completely set forth in the transcript.

"The Court further found that specified exhibits were put in evidence before the Master and reported by

The Instant Case.

of the order was nullified by the remarks of the Court indicating that no prediction would be made as to whether the new record would be acceptable. In detail, the circumstances are as follows:

The decision of the Court of Appeals in effect dismissed the appeal without consideration of the merits. Counsel for appellants filed a petition for rehearing (R. 586-619) which concluded with the formal written statement of counsel, upon their professional oaths as attorneys and counselors of the Court, each in good standing for upwards of twenty-five years, that at the time the transcript of record was prepared, notwithstanding the Court's opinion and subsequent happenings in this and other analogous cases, they did not know how, rule or no rule, a more compact and concise record could be prepared to set before the Court of Appeals the questions heard by the District

The Barber Case.

him; and, supposing that they were not included in the original transcript, it ordered that they be embodied in a supplemental transcript. Neither party made any effort at that time to have the evidence condensed or the testimony put in narrative form. On the contrary, it appears from the Court's order that the appellant requested and the Court directed that 'all the testimony in this cause be reproduced in the exact words of the witnesses, and not in narrative form.' "

The order of the District Court further provided:

"And pages 24 to 4872, inclusive, of the transcript of record heretofore certified by the clerk of this Court on June 29, 1925, amended and supplemented as herein directed, are hereby approved as a true, complete and properly prepared statement of the evidence."

8. After the refiling of this corrected transcript with the clerk of the Court of Appeals and when the cause came on for hearing

The Instant Case.

Court and covered by the appeal and assignments of error (R. 609). Thereafter the Court of Appeals granted the petition for rehearing and *sua sponte* included in the order a provision that the transcript might be withdrawn for a period of thirty days (R. 622). The Barber case and the instant case were two of about a dozen patent cases which received similar treatment at the same time, and discussion came up in open Court on more than one occasion as to whether it was "regular" to withdraw a record after term time, and on each occasion the Court stated plainly that it would not make any advance ruling or even prediction that the changed record would be legal or acceptable. The Court said in effect that it was metaphorically turning its head away to permit counsel to make corrections if desired, but at their own peril. Affidavit of Attorney Howard M. Cox to this ef-

The Barber Case.

on its merits on October 6, 1926,

"appellee renewed its prior suggestions that the evidence be stricken from the transcript because not brought into the record conformably to Rule 75*b* of the Equity Rules, and also insisted that the situation had not been changed by the later proceeding in the District Court because (*a*) that Court was at the time without any power to act in the matter and (*b*), if having power, had not conformed its action to the requirements of that rule."

The Instant Case.

fect is herewith submitted as Appendix A to this brief. It will be observed that the order of the Court of Appeals which permitted the withdrawal of the transcript did not contain any provision such as was contained in the order of the Court of Appeals in the Barber case retaining jurisdiction of the appeal or providing that the transcript when corrected should be returned to the Court.

On February 2, 1927, counsel for appellants filed their motion with the Court of Appeals, in which it was represented that appellants —being advised and believing that the term had run— deemed it futile to withdraw the transcript as permitted by the Court's permission order of January 20, 1927, and therefore petitioned the Court to cancel said permission to withdraw the transcript, and in lieu thereof to either issue an order under the second paragraph of Fed-

The Barber Case.

The Instant Case.

eral Rule 76 directing the District Court, who heard the cause, to correct the original transcript by a supplemental transcript of such character as the Court might under said rule direct, or to permit appellants to file in the Court of Appeals a condensation of the present transcript of record approved in so far as possible by appellees' counsel, and if not approved, accompanied by his objections thereto, the same to stand with the same force and effect as though approved by the District Court (R. 627).

The foregoing motion was presented and argued before the Court of Appeals on February 8, 1927, and then temporarily withdrawn for further consultation with general counsel for appellants, and refiled on February 8, 1927, accompanied by the affidavit of counsel for appellants, in which they made oath that they had at no time moved or requested the

The Barber Case.

The Instant Case.

withdrawal of the transcript for any purpose, and that they never at any time, either orally or in writing, suggested or requested the order accompanying the grant of the petition reading: "Appellant granted leave to withdraw transcript of record thirty days," or any such order. Counsel further made oath that it was and had for many months been their opinion that paragraph 2 of Equity Rule 76 afforded the only legal method of accomplishing such change, if any, as the Court of Appeals desired to have made in the present transcript in this cause (R. 625-626).

The foregoing motion was denied by the Court of Appeals on February 11, 1927 (R. 630).

On April 13, 1927, and without further proceedings being had in the cause, the Court of Appeals entered an order withdrawing its grant of rehearing and restoring its original opinion of December 22, 1926 (R. 632).

Conclusion.

In view of the foregoing, it would seem evident that no penalty can in fairness be imposed on petitioners (appellants) in the present case. Petitioners (appellants) believe they have fully complied with both the letter and the spirit of the rule and that the Court of Appeals did not sufficiently familiarize itself with the record and with the circumstances before making its ruling. But even if petitioners actually failed in their efforts to comply with the rule they were led at all stages, both by opposing counsel, the District Court and the Court of Appeals, to believe they were doing so.

It was not until the decision of the Court of Appeals was handed down, that petitioners had any intimation that the record was not made up in conformity to Equity Rule 75.

Respondents' counsel will no doubt argue that at the time the Court entered the gratuitous order, permitting withdrawal of the record for thirty days, petitioners should have taken advantage of the order and modified the record. The answer to such contention is, first, that it was not *apparent to petitioners' counsel how the record could be improved;* and, second, the Court itself had declined even to hint that the record would be legal after refiling; and, third, that counsel for petitioners entertained a sincere conviction, in view of the fact that the term at which the appeal was allowed had expired, that the new record would not have a legal and valid status in the Court of Appeals when refiled, in the absence of any order of the Court of Appeals reserving jurisdiction over the appeal, as was done in the Barber case. Therefore, petitioners' counsel believed that it would be improvident to withdraw and change the record under the circum-

stances, after having failed to obtain specific directions from the Court.

Judge Anderson, speaking for the Court, in the opinion in the instant case, objected that the record included contempt proceedings, but we have shown that these proceedings involved merely a question of infringement, and were therefore properly in the record. Such so-called contempt proceedings are very different from ordinary contempt proceedings where a party actually disregards or its guilty of contempt of a decree of Court, and is punished therefor by order of Court.

The petition for contempt in the instant case resulted in the addition of thirteen standpipes in the accounting, and manifestly this was a proper subject to be included in the record for review by the Court of Appeals.

Judge Anderson in the opinion of the Court also stated:

> "This an appeal from a decree upon an accounting in a patent suit. Only such evidence as bore upon that matter should have been heard by the Master or the Court below, and only such evidence should have been part of the record 'in case of appeal,' and this only in the way the law prescribes."

As hereinafter stated, in companion case 1191 the Master found the Fenner patent wholly invalid and as no exception was filed on this the Fenner structure became a proper standard of comparison in the accounting, as it was open to public use. By motion this and kindred matters were brought to the attention of the District Court in the instant case but the motions were denied. These matters are all properly in the record and we submit that the defendant-petitioners are entitled to a review of the questions here raised. It is hoped, therefore, that the order of this Court in reversing and remanding will include a specific direction to the Circuit Court of Appeals to consider all of these matters.

Reverting again to the question of penalty, the Court's attention is called to the fact that the record, containing as did only 539 pages, was a short record, considering that it involved technical questions, as well as questions of fact and law, and an accounting in a cause running over a long period of time, and different forms of alleged infringement. It is believed that the Court of Appeals would have made no objection to this record if the case had not come up for consideration at a time when the interpretation of Rule 75 was under special consideration in other cases, particularly the Barber case.

We believe, therefore, that the case should be remanded and that each party should pay its own costs of this proceeding. Petitioners (appellants) have already been penalized as a practical matter, through, as we believe, no fault of their own. They have already had to bear the expense of printing the record in the Court of Appeals, after it had been formally approved by that Court, acting through Judge Evans, as being in accord with the Equity Rules. Also petitioners have had imposed on them, through no fault of their own, as they conceive the situation, the expense of getting the record into this Court. It therefore does not seem just that any additional penalty should be imposed on petitioners.

Respectfully submitted,

FRED L. CHAPPELL,
CARROLL J. LORD,
HOWARD M. COX,
Attorneys for Petitioners.